201311H103

higher education & training

Department:
Higher Education and Training
REPUBLIC OF SOUTH AFRICA

N570(E)(N26)H
NOVEMBER EXAMINATION

NATIONAL CERTIFICATE

FOOD AND BEVERAGE SERVICE N5

(10070355)

26 November 2013 (Y-Paper)
13:00–16:00

This question paper consists of 11 pages.

BUSINESS STUDIES

Copyright reserved

DEPARTMENT OF HIGHER EDUCATION AND TRAINING
REPUBLIC OF SOUTH AFRICA

NATIONAL CERTIFICATE
FOOD AND BEVERAGE SERVICE N5
TIME: 3 HOURS
MARKS: 200

INSTRUCTIONS AND INFORMATION

1. Answer ALL the questions.

2. This question paper comprises TWO sections:

   SECTION A: SHORT QUESTIONS 50 MARKS
   SECTION B: LONG QUESTIONS 150 MARKS
   GRAND TOTAL: 200 MARKS

3. Read ALL the questions carefully.

4. Number the answers according to the numbering system used in this question paper.

5. Start each question on a NEW page.

6. Leave a line between answers in every subsection, for example between QUESTION 1.1 and QUESTION 1.2 (each subsection of a question needs not begin on a new page).

7. Write neatly and legibly.

BUSINESS STUDIES

Copyright reserved

SECTION A: SHORT QUESTIONS

QUESTION 1

1.1 Various options are given as possible answers to the following questions. Choose the answer and write only the letter (A–D) next to the question number (1.1.1–1.1.10) in the ANSWER BOOK.

1.1.1 The reason for bitter coffee:

A Dirty equipment
B Water has not reached boiling point
C Too much coffee used
D Water not fresh.

1.1.2 The main function of the stillroom is …

A to be a quiet place where waiters can relax.
B where grilling of all menu items take place.
C where baking of all cakes and breads take place.
D to provide items of food and drinks which are ready made.

1.1.3 The following tableware is recognised as hollow-ware:

A Coffee pot, fish knife, coffee spoon
B Teapot, milk jug, sugar basin
C Sugar spoon, dessert spoon, soup spoon
D Tea serviette, napkin, joint plate

1.1.4 Alcoholic beverages that are drunk before the meal.

A Starter
B Appetizer
C Aperitif
D Hors d'oevre

1.1.5 This type of service should be set up in a prominent position in the room.

A Buffet
B English
C Butler
D Silver

1.1.6 This person is responsible for room service.

A Station waiter
B Lounge waiter
C Head waiter
D Floor waiter

BUSINESS SIDES

1.1.7 Beer is served in a …

A tankard.
B martini glass.
C flute.
D red wine glass.

1.1.8 A soup plate can also be used for the serving of …

A chicken pie.
B vegetables.
C porridge.
D curry and rice.

1.1.9 To keep food hot during service at a function.

A Chafing-dish
B Microwave oven
C Gas stove
D Normal oven set at 180 °C

1.1.10 The cheese traditionally used in Greek salad.

A Cheddar
B Gorgonzola
C Feta
D Parmesaan

(10 × 1) (10)

1.2 Give ONE word/term for each of the following descriptions. Write only the word/term next to the question number (1.2.1–1.2.10) in the ANSWER BOOK.

1.2.1 A very dry champagne

1.2.2 A medium-sweet sparkling wine

1.2.3 Salt, pepper and mustard set

1.2.4 The half cups used to serve coffee after dinner

1.2.5 This fortified wine originates from Spain

1.2.6 The knife, set on the side plate for bread service

1.2.7 The spoon used to eat dessert

1.2.8 The equipment used to serve portions of gâteau

1.2.9 The glass for champagne and sparkling wines

1.2.10 The glass to serve bottled beers, soft drinks, Pimms, and long drinks (10)

BUSINESS STUDIES

Copyright reserved

1.3 Choose a term from COLUMN B that matches a description in COLUMN A. Write only the letter (A–K) next to the question number (1.3.1–1.3.10) in the ANSWER BOOK.

COLUMN A		COLUMN B	
1.3.1	condiment offered by the waiter to add relish to the dishes served	A	Accompaniment
1.3.2	the bill of fare	B	Colada
1.3.3	a clear soup	C	Compote
1.3.4	one of a group of blended long-drink cocktails	D	Consommé
1.3.5	small pasta dumplings, made from semolina	E	Distillation
1.3.6	self-service buffet	F	Gnocchi
1.3.7	flat round double-layered bread which can be cut open and filled	G	Menu
1.3.8	fruit cooked in a syrup	H	Muscat
1.3.9	sweet wine usually served with dessert	I	Pita bread
1.3.10	the process used to make spirits from fermented wine	J	Pizza
		K	Smorgasbord

(10 × 1) (10)

BUSINESS STUDIES

1.4 Choose the correct word(s) from those given in brackets. Write only the word(s) next to the question number (1.4.1–1.4.10) in the ANSWER BOOK.

1.4.1 The customer is served at a laid table (Assisted service/Table service).

1.4.2 This person works behind the counter, serving both hot and cold beverages as well as alcoholic beverages (Barista/Counter assistant).

1.4.3 The personality of Food and Beverage staff. (Courteous/Bad tempered).

1.4.4 A place-setting is usually (30/60) cm wide.

1.4.5 Flatware, cutlery and hollow-ware are known as (service-ware/tableware).

1.4.6 A French term meaning highest standard of cooking.(House cuisine/Haute cuisine)

1.4.7 To soak ingredients, e.g. herbs, tea leaves, in liquid to impart flavour. (Infuse/marinate).

1.4.8 Meat killed and prepared according to Muslim law (Kosher/Halaal)

1.4.9 The service of this wine includes a ice-bucket (Red/white)

1.4.10 Dirties should always be cleared from the (left-hand/right-hand) side of the customer.

(10 × 1) (10)

1.5 Identify the following serviette folds:

1.5.1

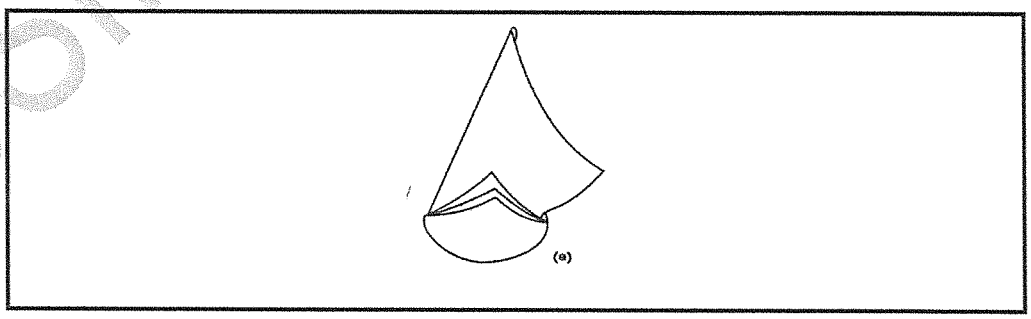

1.5.2

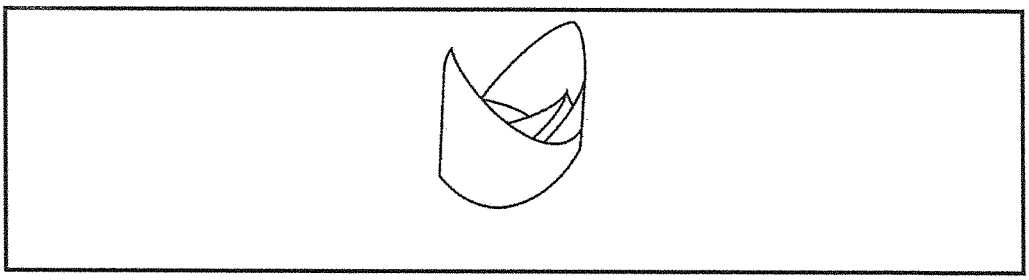

BUSINESS STUDIES

Copyright reserved

1.5.3



1.5.4

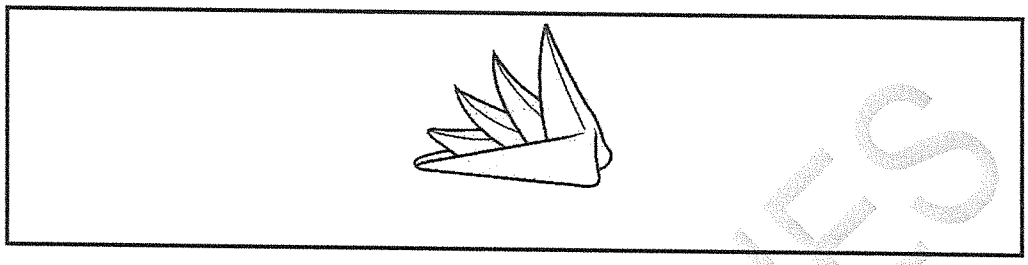

1.5.5

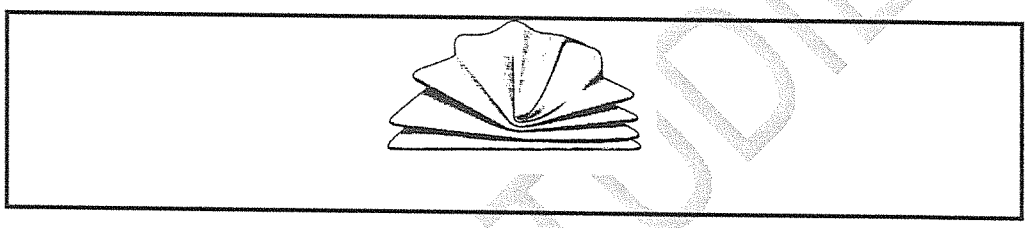

(5 × 1) (5)

1.6 Indicate whether the following statements are TRUE or FALSE. Choose the answer and write only 'true' or 'false' next to the question number (1.6.1–1.6.5) in the ANSWER BOOK.

1.6.1 In deferred or account billing a service has been requested by an individual, firm or company, which has been confirmed and taken place.

1.6.2 Ensure gas and electrical appliances are switched off and plugs removed from sockets before service starts.

1.6.3 The separate bill is the bill made up from the duplicate check and presented to customer.

1.6.4 The cashier will draw up a daily summary sheet to show the daily takings.

1.6.5 The duplicate billing method consists of three copies of the food check.

(5 × 1) (5)

TOTAL SECTION A: 50

BUSINESS STUDIES

SECTION B: LONG QUESTIONS

QUESTION 2

2.1 Name the crockery required for the service of the following:

2.1.1 Consommé as the soup course
2.1.2 Breakfast coffee
2.1.3 Main meal
2.1.4 Sugar
2.1.5 Gravy
2.1.6 Fish course
2.1.7 Hard-boiled eggs
2.1.8 Bread

(8 × 1) (8)

2.2 Name the key characteristics of a table d'hôte menu. (4)

2.3 Comment on the personal hygiene of a waiter under the following headings:

2.1.1 Nails
2.1.2 Hair
2.1.3 Breath and teeth
2.1.4 After shave, perfume and nail varnish
2.1.5 Cuts and burns and colds
2.1.6 Shoes

(6 × 2) (12)

2.4 The service areas are usually between the kitchen and food service areas. In general, especially in large operations, FIVE main service areas can be distinguished. Name them. (5)

2.5 The label on a bottle of wine can give a lot of useful information about the wine.

Name and explain the important information that should always appear on the label. (4 × 2) (8)

2.6 Once the table is clothed-up it should be laid in readiness for service:

2.6.1 How should the cutlery be handled to avoid finger marks? (3)
2.6.2 How should the cutlery be laid to ensure even spacing of the cover? (1)
2.6.3 What would be the first item to be laid on a table d' hôte cover? (1)
2.6.4 What would be the first item to be laid on an a la carte cover? (1)
2.6.5 What is the purpose of placing something initially in the centre of the cover? (2)

2.7 Describe the tea and coffee-making facilities as part of the in-room facilities of a hotel. (5)
[50]

BUSINESS STUDIES

Copyright reserved

QUESTION 3

3.1 The sideboard lay-up forms an important part of the mise-en-place duties in the restaurant. Choose the correct places for each of the following equipment in the picture of a sideboard. Give each equipment storage area the relevant number. E.g. Trays = no. 20

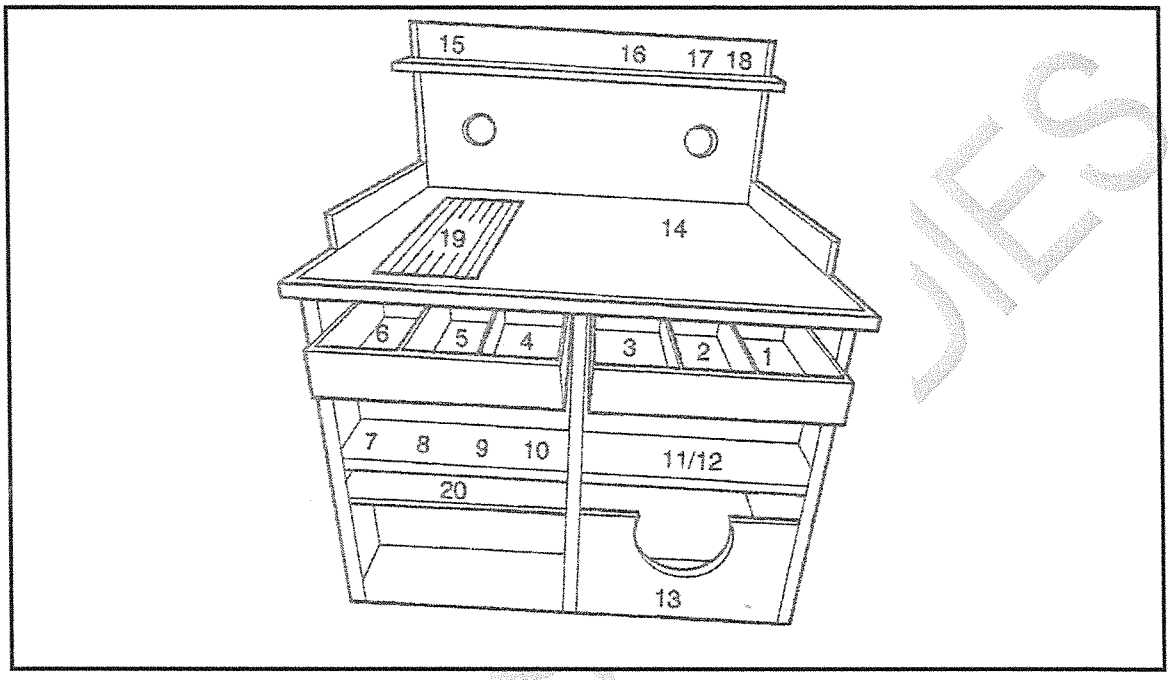

A Joint knives
B Side knives
C Service spoons and forks
D Soup spoons, teaspoons, coffee spoons
E Dirty linen
F Coffee saucers
G Sweet spoons and forks
H Fish plates
I Water jugs
J Hot plate
K Assorted condiments
L Sweet plates

(12 × 1) (12)

3.2 Describe each of the following service styles:

3.2.1 American service
3.2.2 English service
3.2.3 Family service
3.2.4 French service
3.2.5 Russian service
3.2.6 Guéridon service

(6 × 2) (12)

Copyright reserved

3.3 Name FOUR qualities of a successful waiter. (4)

3.4 Name TWO good ways to keep children occupied while they are waiting for their food? (2)

3.5 How should a menu be presented? (3)

3.6 Explain the steps that should be taken by the waiter when a customer complains that his/her chicken dish is not cooked. (6)

3.7 Explain the term *full breakfast* and name SIX courses of a full breakfast. (8)

3.8 After a customer requests the bill, the waiter will collect it from the cashier. Who should check the bill? (1)

3.9 Explain the way in which the bill is presented to the customer. (2)
[50]

QUESTION 4

4.1 The following dishes are served during a dinner:

Chocolate mousse
Tomato gazpacho
Chateaubriand

Explain each dish and name the course in which it should be served. (3 × 2) (6)

4.2 What steps should be taken when a problem arises and the customer makes a complaint? (6)

4.3 Name the essential information which is required when taking a booking. (5)

4.4 Name THREE things to keep in mind when arranging flowers so that it will stay fresh for quite a while. (3)

4.5 It is important for Food and Beverage staff to know how to lay a tablecloth correctly:

4.5.1 What type of fold is used to make the laying of the cloth easy? (1)

4.5.2 Where should the waiter stand when placing the tablecloth and why? (2)

4.5.3 Explain in FIVE steps the correct procedure of laying the tablecloth. (5)

BUSINESS STUDIES

Copyright reserved

4.6 There are certain duties to perform before the service in a restaurant commences.

4.6.1 What is the French term for these duties? (1)

4.6.2 Name FIVE preparation duties of the supervisor. (5)

4.7 Explain, in SIX steps, the procedure that the waiter should follow for the plated service of a meal from arrival of customer to the point where the bread is offered. (6 × 2) (12)

4.8 Name FOUR types of services that can take place in the lounge of a hotel. (4)
[50]

TOTAL SECTION B: 150
GRAND TOTAL: 200

BUSINESS STUDIES

Copyright reserved