higher education & training

Department:
Higher Education and Training
REPUBLIC OF SOUTH AFRICA

NATIONAL CERTIFICATE

WELDERS' THEORY N2

(11022082)

20 November 2020 (X-paper)
09:00–12:00

Drawing instruments may be used.

This question paper consists of 6 pages and 1 diagram sheet.

211Q1E2020

Copyright reserved

DEPARTMENT OF HIGHER EDUCATION AND TRAINING
REPUBLIC OF SOUTH AFRICA

NATIONAL CERTIFICATE
WELDERS' THEORY N2
TIME: 3 HOURS
MARKS: 100

INSTRUCTIONS AND INFORMATION

1. Answer all the questions.
2. Read all the questions carefully.
3. Number the answers according to the numbering system used in this question paper.
4. All drawings to be done in pencil
5. Write neatly and legibly.

Copyright reserved

QUESTION 1

1.1 Choose a term from COLUMN B that matches the component in COLUMN A. Write only the letter (A–J) next to the question number (1.1.1–1.1.7) in the ANSWER BOOK.

COLUMN A	COLUMN B
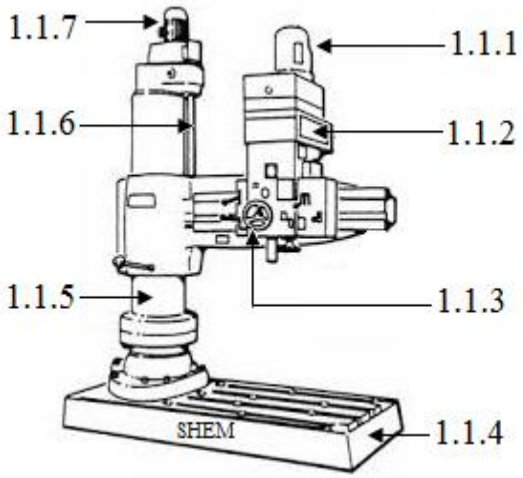	A saddle transverse hand wheel B head C elevating screw D spindle motor E speed and feed gear box F base G chuck H operating handle I arm elevating motor J column

(7 × 1) (7)

1.2 List THREE safety precautions when working with a radial power saw. (3)

1.3 Draw and label an angle-iron pipe stand used to hold a pipe which is being marked or tacked in position. (5)

1.4 Draw a neat, labelled diagram of a four-hole flange showing the following:

- Pitch-circle diameter (PCD)
- Inside diameter (ID)
- Flange thickness
- Outside diameter (OD)

(5)
[20]

QUESTION 2

2.1 Draw a neat, notched welded joint of TWO angle irons at 90° to each other. (5)

2.2 State the purpose of a jig. (2)

2.3 Explain how to set up oxy-acetylene equipment to obtain a neutral flame. (5)

2.4 Impurities found on plates during the gas welding or cutting process can have adverse effects on the quality of the final product.

List FIVE impurities that can have an adverse effect on gas cutting or gas welding. (5)

2.5 Give THREE causes of backfire in oxy-acetylene equipment. (3)

[20]

QUESTION 3

3.1 FIGURE 1 shows a right cone.

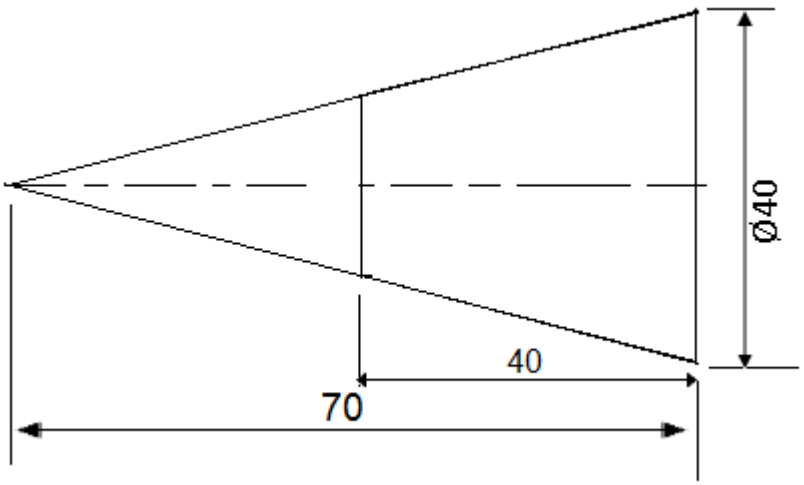

FIGURE 1

3.1.1 Draw the given view of the right cone on the attached DRAWING SHEET. (3)

3.1.2 Use the radial line method and develop the pattern of the right cone on the DRAWING SHEET used for QUESTION 3.1.1 (12)

NOTE: Write your EXAMINATION NUMBER on the DRAWING SHEET and place it in the ANSWER BOOK.

3.2 Label the indicated parts of the roof truss shown in FIGURE 2 by writing the answer next to the letter (AE) in the ANSWER BOOK.

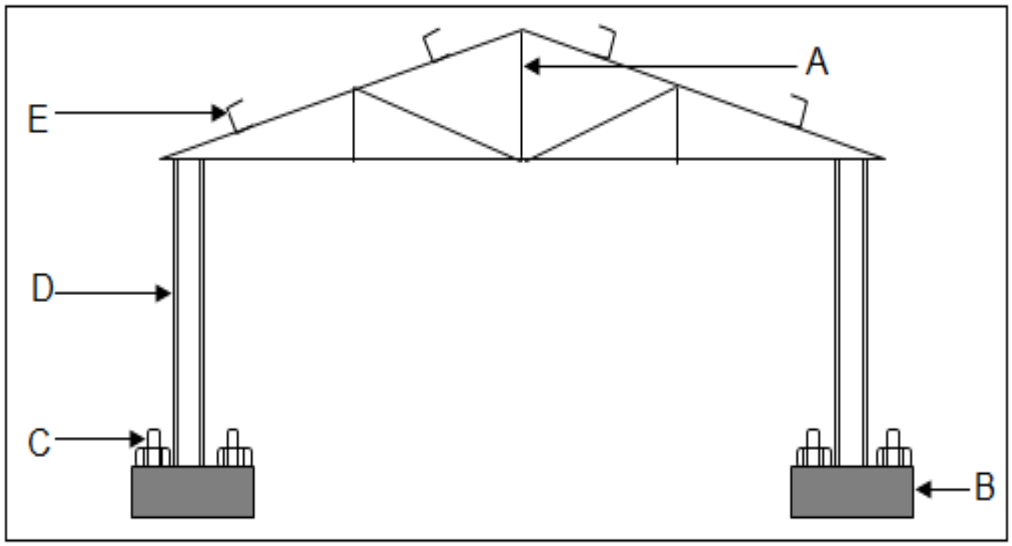

FIGURE 2 (5)

[20]

QUESTION 4

4.1 Name THREE types of stainless steel. (3)

4.2 Give FIVE examples of the many uses of stainless steel. (5)

4.3 List FOUR advantages of preheating and maintaining the heat when welding chromium steels. (4)

4.4 Give THREE times in which visual inspection of welding takes place. (3)

4.5 Name FIVE types of non-destructive testing done on welds. (5)

[20]

QUESTION 5

5.1 FIGURE 3 shows different types of weld groove symbols used for shielded metal arc welding (SMAW).

Label each type of groove symbol by writing the answer next to the letter (A–F) in the ANSWER BOOK.

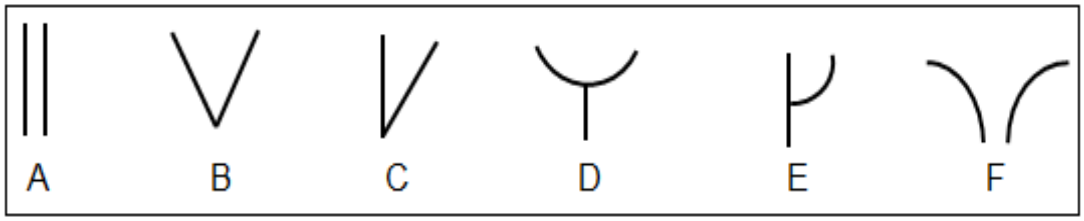

FIGURE 3 (6)

5.2 Complete the following paragraph by choosing a word or words from the list below. Write only the word or words next to the question number (5.2.1–5.2.5) in the ANSWER BOOK.

voltage; welding electrode; diameter; base metal; penetration

Arc length is the distance from the (5.2.1) … to the tip of the (5.2.2) … It is important that the arc length is not too short or else the (5.2.3) … will be too low with not enough heat to melt the base metal for good (5.2.4) … The arc should be kept the same as the electrode (5.2.5) … (5)

5.3 Give TWO advantages of metal inert gas (MIG) welding compared to tungsten inert gas (TIG) welding. (2)

5.4 Explain the effects of preheating steel before welding can commence. (3)

5.5 Give FOUR purposes of normalising steel (heat treatment to normalise the grain structure of steel). (4)

[20]

TOTAL: 100

Copyright reserved

(11022082)

WELDERS THEORY N2

DRAWING SHEET **EXAMINATION NUMBER:**

QUESTION 3 (Remove and hand in with the question paper)

Copyright reserved