higher education & training

Department:
Higher Education and Training
REPUBLIC OF SOUTH AFRICA

T1640(E)(N12)T
NOVEMBER EXAMINATION

NATIONAL CERTIFICATE

WELDERS' THEORY N2

(11022082)

12 November 2014 (Y-Paper)
13:00–16:00

Candidates will need drawing instruments.

Nonprogrammable calculators may be used.

This question paper consists of 5 pages and 1 diagram sheet.

ENGINEERING

Copyright reserved

DEPARTMENT OF HIGHER EDUCATION AND TRAINING
REPUBLIC OF SOUTH AFRICA

NATIONAL CERTIFICATE
WELDERS' THEORY N2
TIME: 3 HOURS
MARKS: 100

INSTRUCTIONS AND INFORMATION

1. Answer ALL the questions.
2. Read ALL the questions carefully.
3. Number the answers according to the numbering system used in this question paper.
4. Freehand drawings must be done in pencil and must be neat and reasonably large.
5. Write neatly and legibly.

ENGINEERING

Copyright reserved

QUESTION 1: MACHINES

1.1 Briefly describe the difference between the cutting action of the guillotine and that of the nibbling machine. (4)

1.2 FIGURE 1 below shows the punching, shearing and cropping machine.

Give the names of the components on the drawing next to the letters (A–E) in the ANSWER BOOK.

(6)
[10]

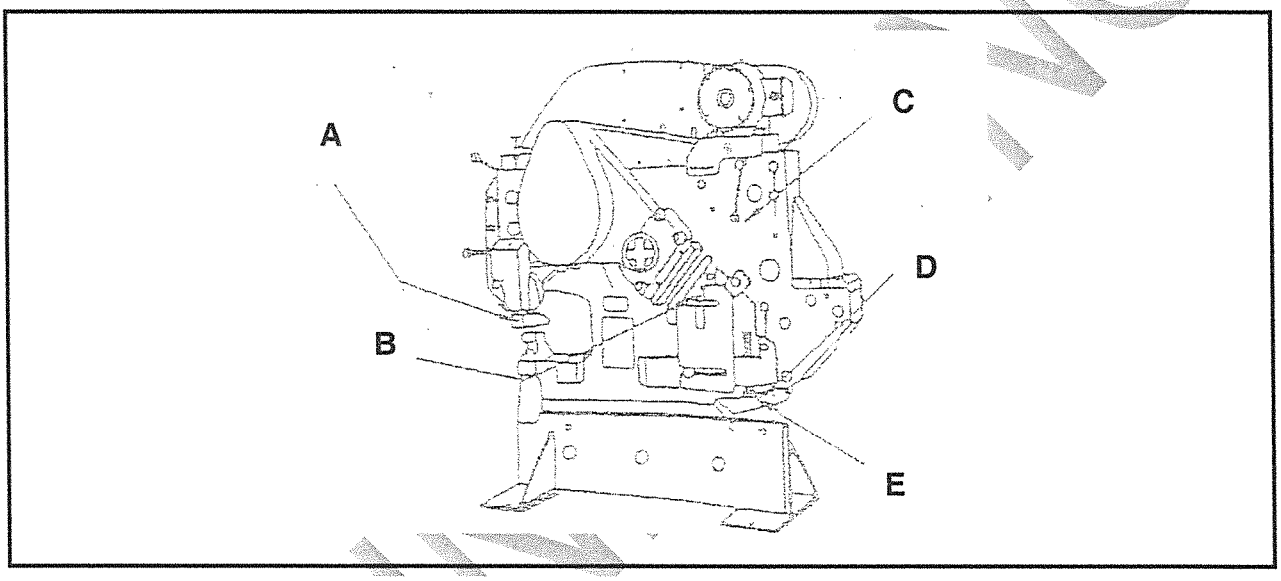

FIGURE 1

QUESTION 2: JOINING OF ROLLED-STEEL SECTIONS

2.1 Illustrate, by means of a freehand drawing, a 90° connection between two angle-iron sections of unequal size. (3)

2.2 Explain the difference between an assembly aid and a jig. (4)
[7]

QUESTION 3: GENERAL PIPE WORK

3.1 Calculate the length of a 90°-pipe bend. The centre-to-face (C–F) distance is 342 mm. (4)

3.2 Explain the meaning of the following terms as applicable to pipe work:

3.2.1 Elbow

3.2.2 Template

(2 × 2) (4)
[8]

Copyright reserved

QUESTION 4: DEVELOPMENT

FIGURE 2 on DIAGRAM SHEET, shows a rectangle-to-square transition piece.

Use the triangulation method to develop the pattern of the transition piece on DIAGRAM SHEET 2.

Write your examination number on the ANSWER SHEET and place it in the ANSWER BOOK. **[15]**

QUESTION 5: STEEL STRUCTURES

Briefly describe the meaning of the following terms applicable to roof trusses:

5.1 Rafter (2)

5.2 Queen post (2)

5.3 King post (1)
[5]

QUESTION 6: METALS

6.1 Name TWO types of cast iron. (2)

6.2 Name the TWO main impurities present in aluminium. (2)

6.3 What is meant by hot-shortness of copper? (3)

6.4 Name TWO effects of welding low-carbon steel with the incorrect polarity. (4)

6.5 Why is heat treatment not applicable to mild steel (low-carbon steel)? (2)

6.6 Name TWO properties of high-carbon steel. (2)
[15]

QUESTION 7: GAS WELDING AND CUTTING

7.1 Explain how the nozzle is protected against heat damage. (3)

7.2 Briefly describe how the oxy-acetylene profile-cutting machine operates. (4)

7.3 Illustrate, with the aid of a labelled freehand drawing, a cross-section view of an acetylene cylinder showing its contents. (5)
[12]

ENGINEERING

Copyright reserved

QUESTION 8: ARC WELDING

8.1 Describe, with the aid of a freehand drawing, each of the following welding terms:

8.1.1 Bevel angle

8.1.2 Weld sequence

8.1.3 Penetration

(3 × 2) (6)

8.2 Briefly describe the tungsten inert gas (TIG) welding process. (3)

8.3 Draw the weld symbol for each of the following:

8.3.1 Double J-weld

8.3.2 Double U-weld

8.3.3 Square weld

(3 × 2) (6)
[15]

QUESTION 9: WELD TESTING

9.1 Name THREE destructive weld-testing methods. (3)

9.2 Briefly describe how to prepare a workpiece for dye-penetrant inspection. (2)
[5]

QUESTION 10: HEAT-TREATMENT OF STEEL

10.1 Explain the meaning of the following terms:

10.1.1 Brittleness

10.1.2 Ductility

10.1.3 Hardness

(3 × 2) (6)

10.2 What is the carbon in pure iron called? (2)
[8]

TOTAL: 100

Copyright reserved

QUESTION 4

EXAMINATION NUMBER:

DIAGRAM SHEET

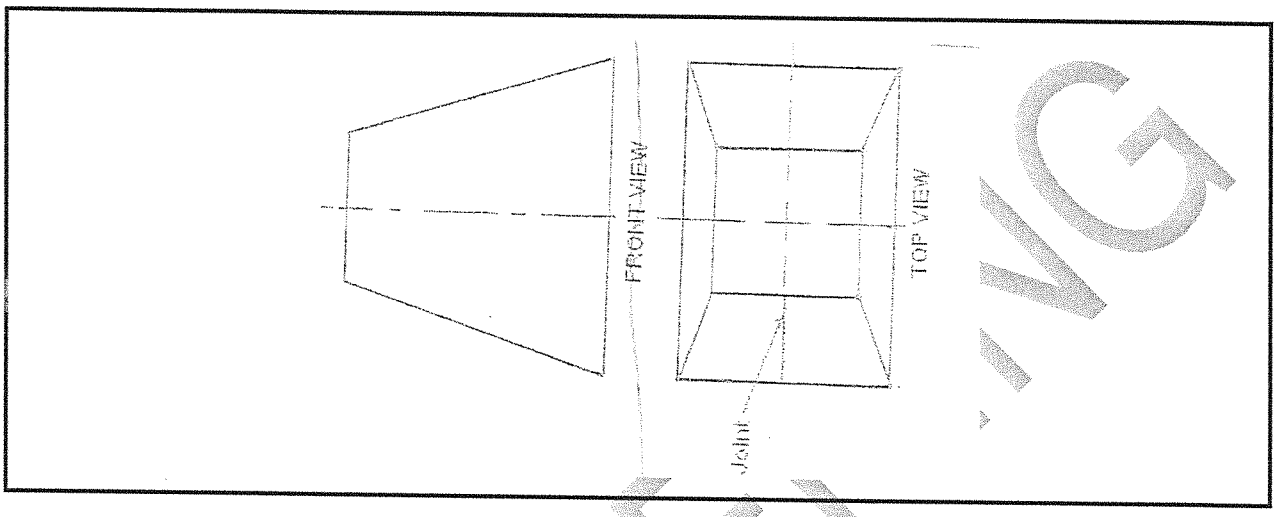

FIGURE 2

ENGINEERING

Copyright reserved