higher education & training

Department:
Higher Education and Training
REPUBLIC OF SOUTH AFRICA

MARKING GUIDELINE

NATIONAL CERTIFICATE

NOVEMBER EXAMINATION

WELDERS' THEORY N2

12 NOVEMBER 2014

This marking guideline consists of 8 pages.

Copyright reserved

QUESTION 1: MACHINES

1.1 Cutting action of a guillotine
The cut is made in one downward stroke of the long top blade. The top blade is set at an angle (scissors action) to make the cut. (2)

Cutting action of a nibbling machine
The short top jaw has a rapid up and down movement to cut thin plates and curves. (2)

1.2 Punching, shearing and cropping machine

A – Punch and stripper
B – Cropper for cropping
C – Main frame
D – Shearing blades
E – Adjustable hold-downs (6)
[10]

QUESTION 2: JOINING OF ROLLED-STEEL SECTIONS

2.1 A 90°-connection between two angle irons of unequal size.

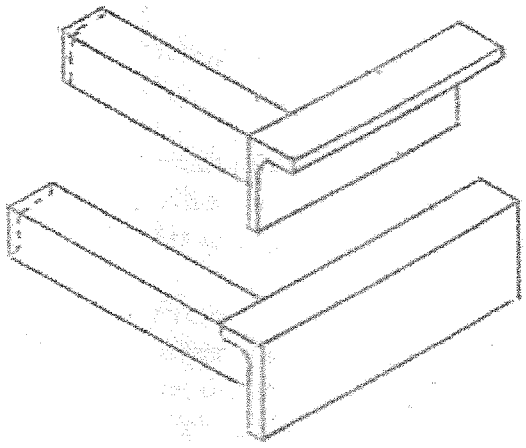

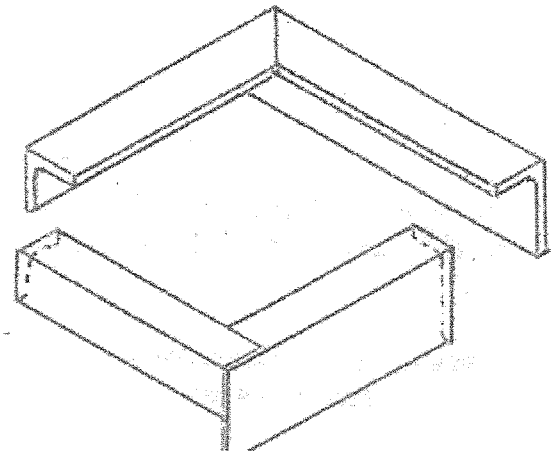

(Any ONE) (3)

2.2 Assembly aids – are devices usually made from scrap material that aid (help) to move parts into the correct position for tacking and welding. (2)

Jigs – are devices into which the parts are clamped together in their correct position. The parts are tacked or welded while they are held by the jig. (2)
[7]

Copyright reserved

QUESTION 3: GENERAL PIPE WORK

3.1 Length $= \frac{90° \times 6{,}283 \times 342 \text{ mm}}{360°}$

$= 537{,}197 \text{ mm}$ (4)

3.2 Meaning of Terms

3.2.1 Elbow – used to join two pipes that are not parallel, but are at right angles to each other. A bend in a pipe. (2)

3.2.2 Template – a flexible form which is wrapped around a pipe to mark the pipe for cutting. (2)
[8]

QUESTION 4: DEVELOPMENT

See Diagram Sheet 2 (Attached) **[15]**

QUESTION 5: STEEL STRUCTURES

5.1 Rafter – it is the inclined member that runs from the shoe connection to the apex. It carries the roof covering. (2)

5.2 Queen post – a vertical member that is placed between the centre and the heel of a roof truss. It is connected to the rafter and the main tie. (2)

5.3 King post – a vertical member that joins the apex to the main tie of a roof truss. (1)
[5]

QUESTION 6: METALS

6.1 Types of cast iron

- Grey
- White
- Malleable

(Any 2 × 1) (2)

6.2 Iron and silicon (2)

6.3 Hot-shortness – when copper is heated to its melting temperature, a stage is reached where the copper becomes very weak, this is called hot-shortness. (3)

Copyright reserved

6.4 Incorrect polarity
- Poor penetration
- Excessive splatter

(2 × 2) (4)

6.5 Heat treatment is not applicable to mild steel because the carbon content is too low, between 0,05% and 0,3%. (2)

6.6 Properties of high carbon steel
- Very hard
- Wear resistant
- Can be hardened

(Any 2 × 1) (2)
[15]

QUESTION 7: GAS WELDING AND CUTTING

7.1 Nozzles are fitted with hard-faced skids to prevent wear and damage. Maintain the correct distance of the flame from the workpiece. (3)

7.2 Profile-cutting machine
Is mechanically driven to cut one or more identical items. The tracing head on the upper table to which the steel template is fastened, follows the pattern of the template. The cutting head on the opposite side follows the same pattern and cuts a replica out of the steel plates that are on the cutting table. (4)

7.3 Cross-section of acetylene cylinder

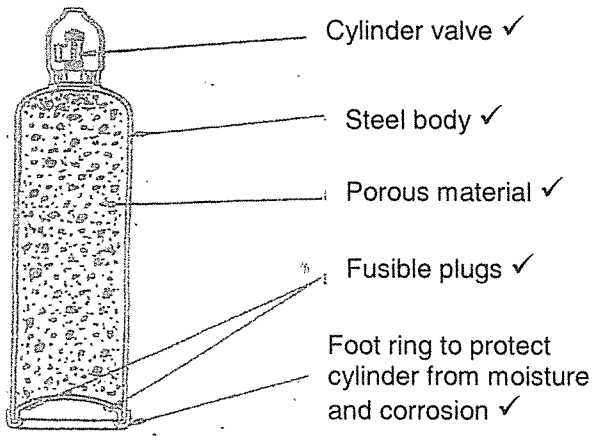

(5)
[12]

Copyright reserved

QUESTION 8: ARC WELDING

8.1 Welding Terms:

8.1.1 Bevel-angle – angle at which an end or edge is chamfered

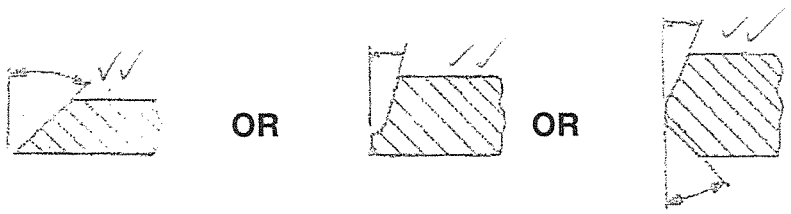

(2)

8.1.2 Weld-sequence – order in which welds, joins or runs are to be welded

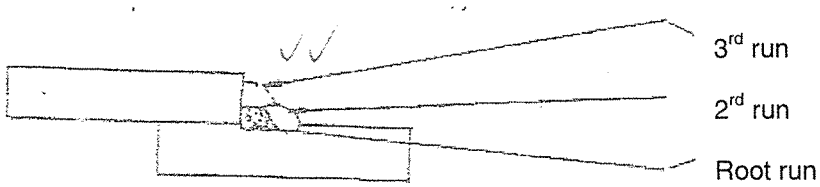

(2)

8.1.3 Penetration – the depth to which the fusion zone extends below the surface of the joint.

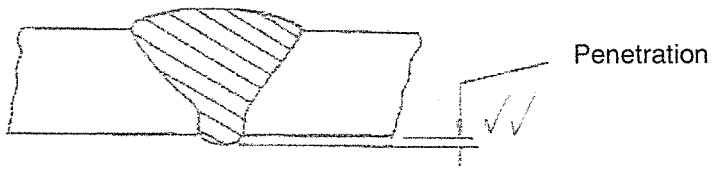

(2)

8.2 TIG welding process
Uses the heat of an electric arc between a non-consumable tungsten electrode and the base metal to form the molten pool. An intergas (argon or helium) serves as a shield to protect the molten pool from oxidation. The filler rod is fed into the molten pool manually (as in gas welding). (3)

8.3 Weld Symbols

8.3.1 Double J-weld



8.3.2 Double U-weld

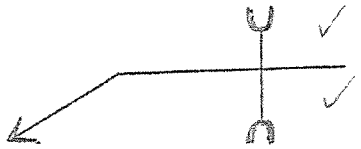

8.3.3 Square weld-weld

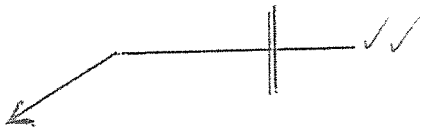

(3 × 2) (6)
[15]

QUESTION 9: WELD TESTING

9.1 *Destructive*

- Tensile test
- Nick-bend test
- Guided bend test
- Free bend test
- Impact test

(Any 3 × 1) (3)

9.2 Dye-penetrant inspection
Before applying the liquid penetrant, the part must be cleaned with a cleaning solvent, to remove dirt and impurities. This solvent cleaner ensures that all openings are clean enough to allow the penetrant to enter the openings. (2)
[5]

QUESTION 10: HEAT-TREATMENT OF STEEL

10.1 Meaning of terms

10.1.1 *Brittleness*
The property of breaking without much permanent distortion

10.1.2 *Ductility*
The ability of metal to stretch without breaking

Copyright reserved

10.1.3 *Hardness*
The ability to withstand scratching, wear and indentation by harder objects

(2 × 3) (6)

10.2 Pearlite (2)
[8]

TOTAL: 100

Copyright reserved

EXAMINATION NUMBER:

DIAGRAM SHEET 2

QUESTION 4: DEVELOPMENT

FIGURE 3: RECTANGULAR-TO-SQUARE

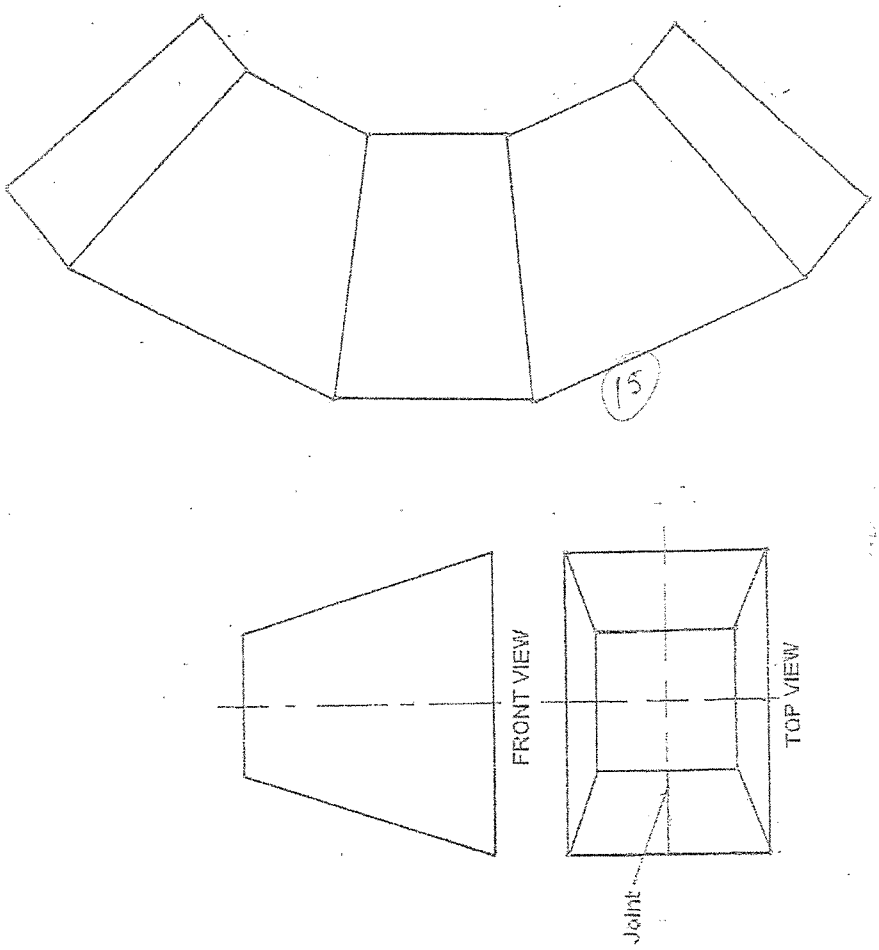

FIGURE 2

Copyright reserved