higher education & training

Department:
Higher Education and Training
REPUBLIC OF SOUTH AFRICA

ENGINEERING

T1600(E)(M25)T
APRIL EXAMINATION

NATIONAL CERTIFICATE

WELDERS' THEORY N2

(11022082)

25 March 2014 (Y-Paper)
13:00–16:00

Candidates will need drawing instruments.

Nonprogrammable calculators may be used.

This question paper consists of 5 pages and 2 diagram sheets.

Copyright reserved

DEPARTMENT OF HIGHER EDUCATION AND TRAINING
REPUBLIC OF SOUTH AFRICA

NATIONAL CERTIFICATE
WELDERS' THEORY N2
TIME: 3 HOURS
MARKS: 100

INSTRUCTIONS AND INFORMATION

1. Answer ALL the questions.
2. Read ALL the questions carefully.
3. Number the answers according to the numbering system used in this question paper.
4. Freehand drawings must be done in pencil and must be neat and reasonably large.
5. Write neatly and legibly.

ENGINEERING

Copyright reserved

QUESTION 1: MACHINES

1.1 Explain with the aid of a freehand drawing, how a plate is prevented from being pulled upwards after the hole has been punched. (4)

1.2 State TWO uses of a radial arm drilling machine. (2)

1.3 FIGURE 1, DIAGRAM SHEET 1 (attached) shows a pedestal grinding machine.

Write, in the ANSWER BOOK, the name for each of any FOUR of the components indicated by the letters (A–G). (4)
[10]

QUESTION 2: ROLLED STEEL SECTIONS

2.1 Illustrate, by means of a freehand drawing, a 90° connection between an angle iron and a channel iron. (3)

2.2 State FOUR advantages of using a jig. (4)
[7]

QUESTION 3: GENERAL PIPEWORK

3.1 Indicate, by means of a freehand drawing, the centre-to-face (C–F) distance of a 45° pipe bend. (4)

3.2 Explain the meaning of the following terms, as applicable to pipe flanges:

3.2.1 Pitch circle diameter

3.2.2 Pitch

(2 × 2) (4)
[8]

QUESTION 4: DEVELOPMENT

FIGURE 3, DIAGRAM SHEET 2 (attached) shows a right cone with a horizontal round pipe truncation.

Use the radial line method to develop the pattern of the cone on DIAGRAM SHEET 2. Write your EXAMINATION NUMBER on the DIAGRAM SHEET and place it in the ANSWER BOOK. **[15]**

ENGINEERING

Copyright reserved

QUESTION 5: STEEL STRUCTURES

Explain the meaning of the following terms with regard to roof trusses:

5.1 Span (2)

5.2 Strut (2)

5.3 Overhang (1)
[5]

QUESTION 6: METALS

6.1 What is meant by the term *de-oxidised copper*? (2)

6.2 Name the mineral from which aluminium is obtained. (2)

6.3 State TWO advantages of metallic arc welding of cast iron. (2)

6.4 Name THREE workshop tests that can be conducted to find out whether an aluminum casting has reached the required temperature of 325 °C–360 °C. (3)

6.5 Explain the effect on steel when alloyed with each of the following elements:

6.5.1 Nickel

6.5.2 Tungsten

6.5.3 Vanadium

(3 × 2) (6)
[15]

QUESTION 7: GAS WELDING AND CUTTING

7.1 What is meant by the term *differential expansion* and how does it happen? (3)

7.2 Explain what is meant by the term *fusion welding.* (2)

7.3 Briefly explain how allowances are made on a template for profile cutting. (3)

7.4 Briefly describe the difference between heat nozzles and flame-cleaning nozzles and where each is used when steel structures must be cleaned. (4)
[12]

ENGINEERING

Copyright reserved

QUESTION 8: ARC WELDING

8.1 Briefly explain the tungsten inert gas-(TIG) welding process. (3)

8.2 What is meant by the term reverse polarity in direct-current welding? (2)

8.3 FIGURE 3, DIAGRAM SHEET 1 (attached) shows the important components of the metal inert gas-(MIG) welding system.

Name FOUR parts that correspond to the letters (A–G) as indicated in the drawing. Write your answers in the ANSWER BOOK. (4)

8.4 Make a neat freehand drawing of the welding symbol for each of the following welding joints:

8.4.1 Site weld

8.4.2 Weld all round

8.4.3 Fillet weld on both sides

(3 × 2) (6)
[15]

QUESTION 9: WELD TESTING

9.1 What property of a metal is the impact test designed to test? (2)

9.2 What is meant by the term *ductility* as applicable on a metal? (3)
[5]

QUESTION 10: HEAT TREATMENT OF STEEL

10.1 Briefly explain the following terms:

10.1.1 Annealing

10.1.2 Hardening

(2 × 2) (4)

10.2 Explain what is meant by the *austenite structure of steel.*

10.3 What is *pure iron* in steel called?

(2 × 2) (4)
[8]

TOTAL: 100

ENGINEERING

Copyright reserved

DIAGRAM SHEET 1

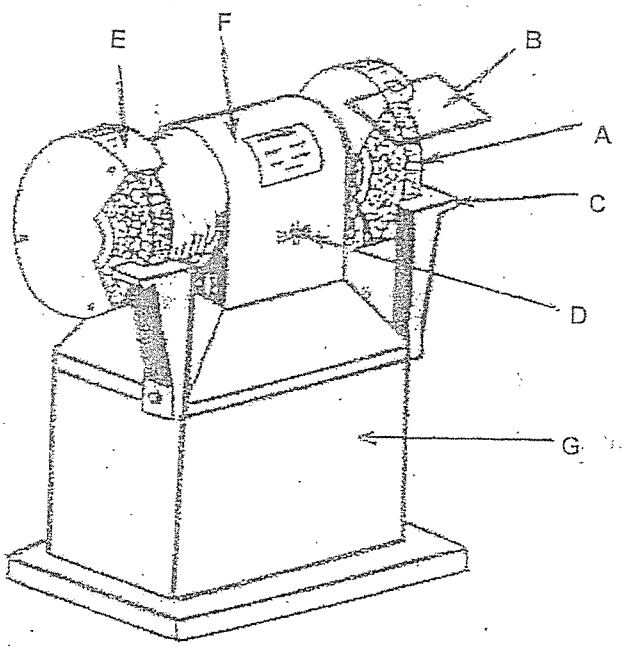

FIGURE 1

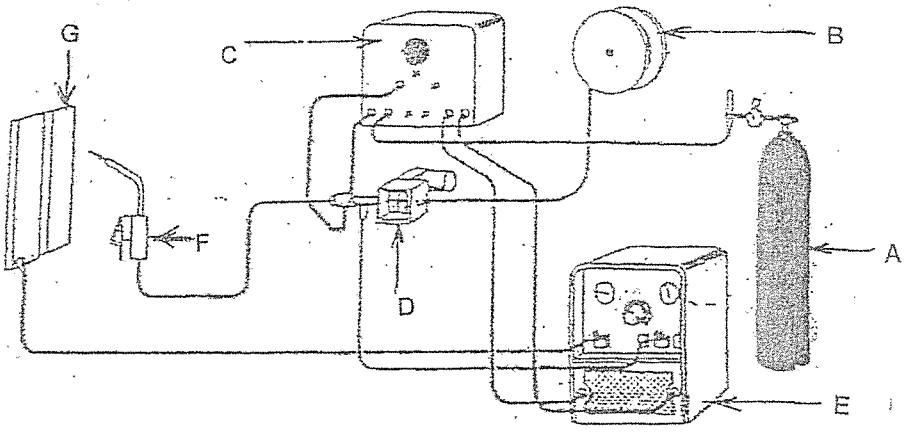

FIGURE 3

Copyright reserved

DIAGRAM SHEET 2

EXAMINATION NUMBER:

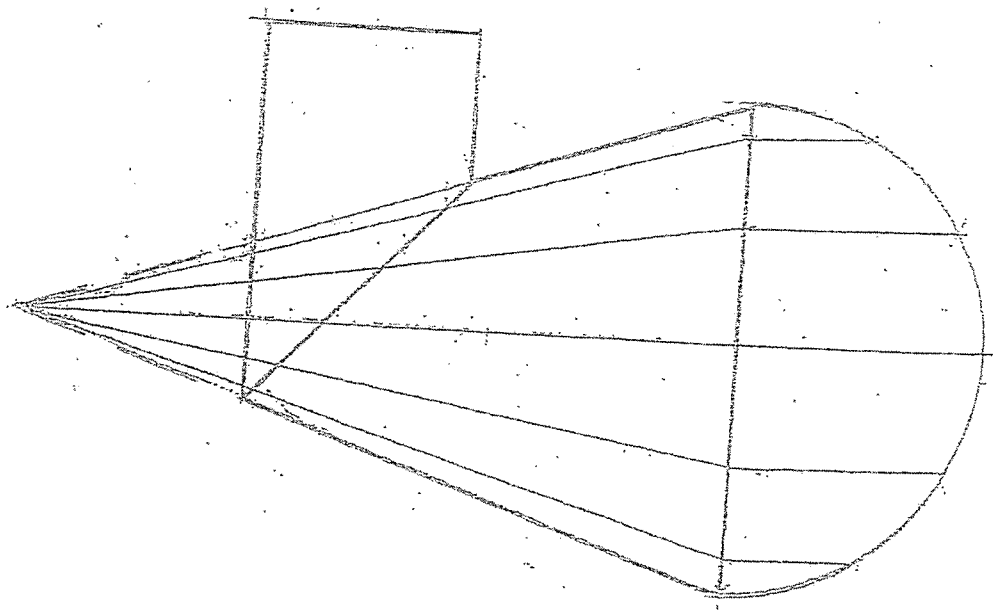

FIGURE 2

Copyright reserved