0000000

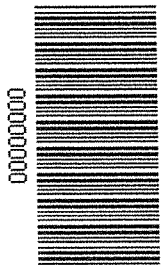

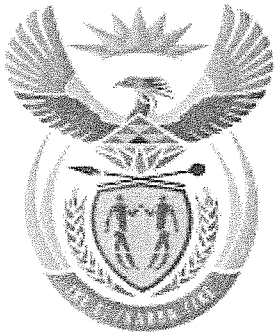

higher education & training

Department:
Higher Education and Training
REPUBLIC OF SOUTH AFRICA

MARKING GUIDELINE

NATIONAL CERTIFICATE

NOVEMBER EXAMINATION

WELDERS' THEORY N2

25 MARCH 2014

This marking guideline consists of 7 pages.

Copyright reserved

QUESTION 1

1.1

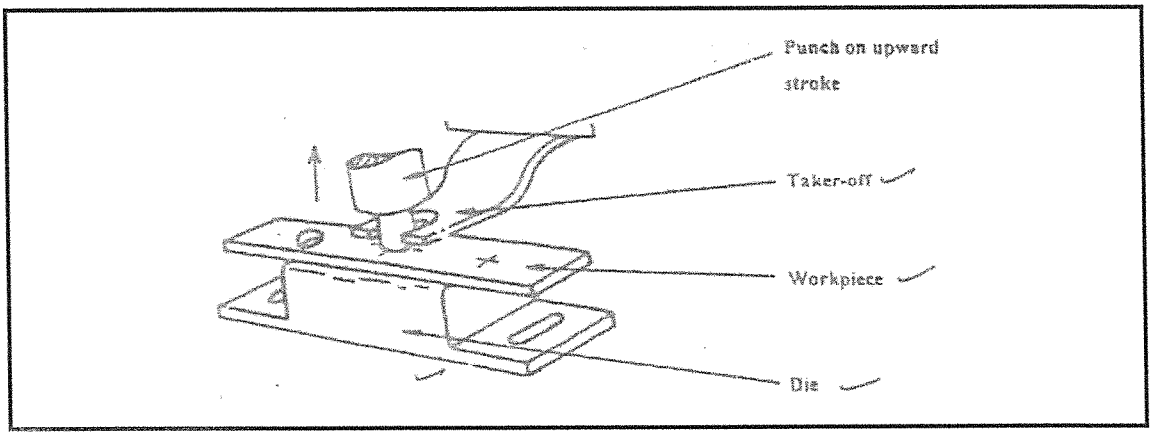

PUNCH ON THE UPWARD STROKE (4)

1.2 Radial arm drilling machine used when the work piece is too large to be clamped onto the table of a pedestal-drilling machine or when large diameter holes have to be drilled on the work piece. (2)

1.3 A – Grinding wheel
B – Shield
C – Work rest
D – On/off switch
E – Safety guard
F – Electric motor
G – Pedestal (4)

[10]

QUESTION 2

2.1 A 90° connection between an angle-iron and a channel iron

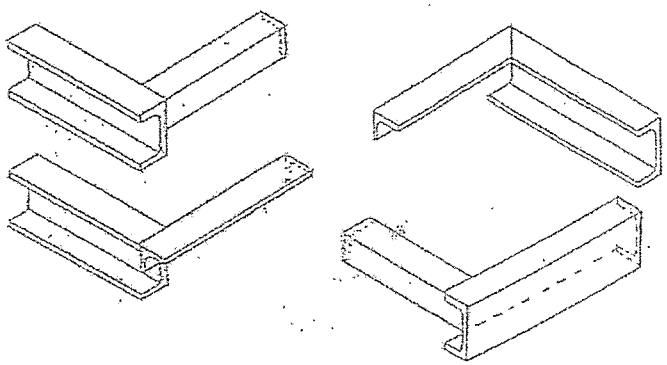

(3)

2.2
- Semi – skilled labour is used
- Mass production
- Saves time
- Accurate
- Inexpensive to make

(4)
[7]

QUESTION 3

3.1 Centre-to-face (C-F) distance - 45° pipe bend

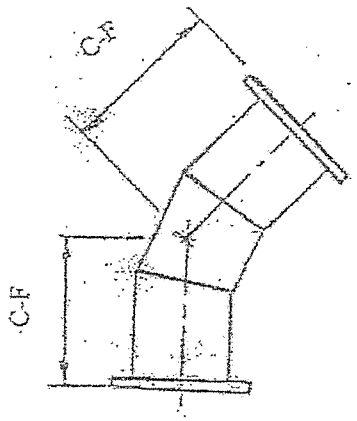

(4)

3.2 3.2.1 PITCH CIRCLE DIAMETER
When holes are drilled in flanges, a circle is scribed and the centres are marked for drilling. The diameter of this circle is called the pitch circle diameter.

3.2.2 PITCH
When a series of equally spaced holes have to be marked off on a line or curve, the distance from the centre of one hole to the centre of the next is called the pitch.

(2 × 2) (4)
[8]

Copyright reserved

QUESTION 4

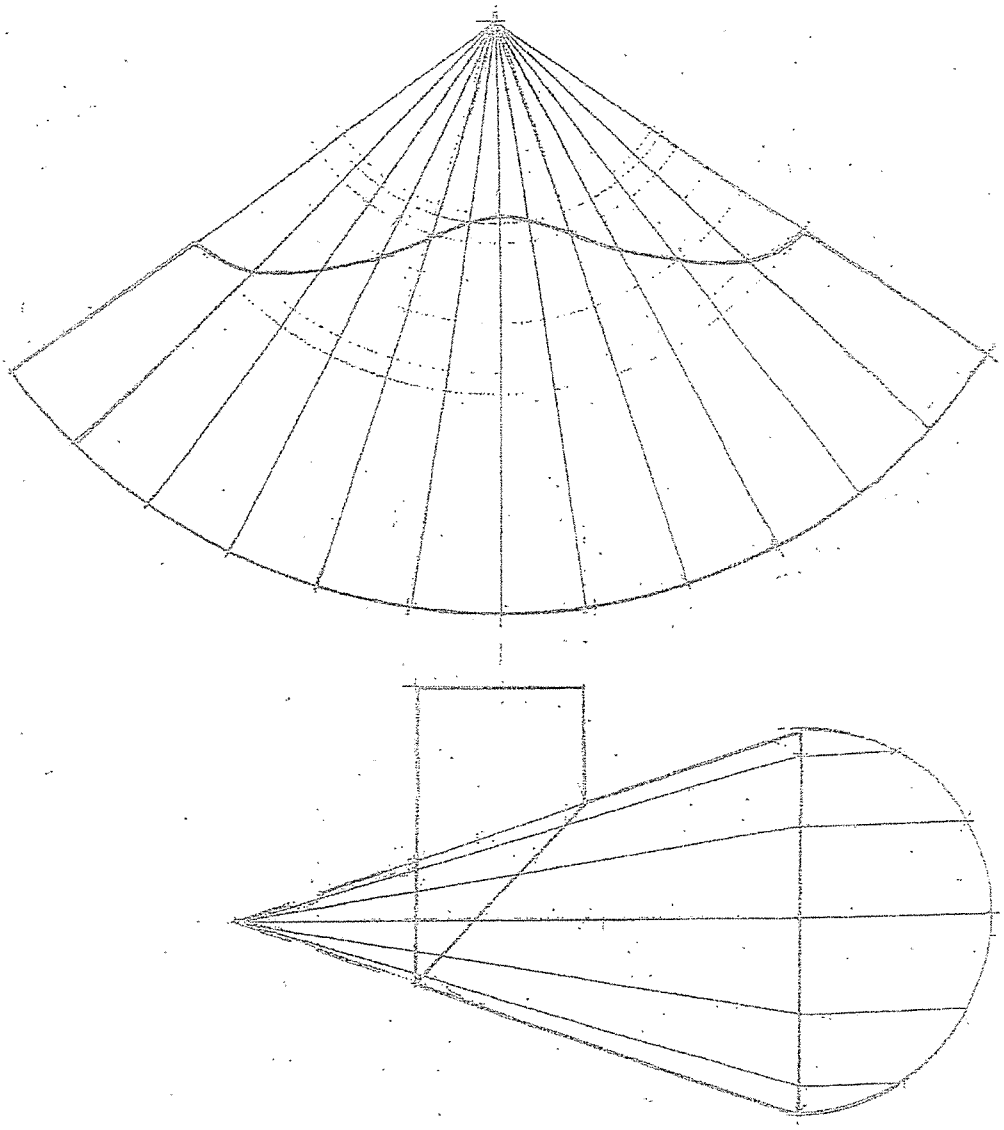

RIGHT CONE WITH HORIZONTAL RIGHT PIPE **[15]**

Copyright reserved

QUESTION 5

5.1 SPAN

Is the distance from the centre of one wall to the centre of the other wall on which the roof truss rests. (2)

5.2 STRUT

A structural member that is placed to withstand a compressive force. This compressive or pushing force presses on a member, tending to crush it. (2)

5.3 OVERHANG

Is the part from the outside surface of the external wall to the end of the roof covering. (1)
[5]

QUESTION 6

6.1 Deoxidised copper oxygen-free copper. The oxygen is removed by adding phosphorous while the copper is still in its molten state. (2)

6.2 Bauxite (2)

6.3
- Saves time
- Saves gasses – therefore cheaper
- Satisfactory welds can be achieved quickly
- Machines do not have to be stripped down, can be welded in position

(Any 2 × 2) (2)

6.4
- Resting a match on the surface of the work, when the temperature is correct, the match will ignite.
- Applying wood or sawdust to the surface and noting when it begins to char.
- Rubbing soap over the work, the colour will change to chocolate tint when ready.
- Before pre-heating, make several marks on the surface with blue waxed crayon. These will turn brown when welding heat has been reached. (3)

6.5 6.5.1
- Increases resistance to corrosion, heat and impacts
- Increases strength and hardness
- Improves ability to resist fatigue (Any 2 × 1) (2)

6.5.2
- Increase strength and toughness
- Ensures a dense and fine structure
- Has good magnetic properties
- Increases resistance to wear
- Ensures that steel retains its hardness at high temperatures

(Any 2 × 1) (2)

Copyright reserved

6.5.3
- Refines the structure of steel
- Increases resistance to wear
- Has great endurance under repeated loading (Any 2 × 1) (2)

[15]

QUESTION 7

7.1 Differential expansion – When the surface is heated, the difference in the rate of expansion between the layers of scales and the base metal causes the scales to break off. This scale removal is called differential expansion. (3)

7.2 Fusion welding is a process where two pieces of similar metals are joined together. The welding surfaces are melted and then a quantity of molten metal is added. (2)

7.3 Template makers must know how thick a cut will be so that they may add/subtract this known thickness all around the perimeter of template. This will ensure that the cut item will be the correct size. (3)

7.4 Heating nozzles are used to clean in confined spaces like structural connections. The round heating nozzle can effectively reach into corners.

Flame-cleaning nozzle is used when a fairly broad area has to be cleaned. These are areas that are easily accessible. (4)

[12]

QUESTION 8

8.1 The *TIG-welding process* uses the heat of an electric arc between a non-consumable tungsten electrode and the base metal to form the molten pool. An inert gas (argon or helium serves as a shield to protect the molten pool from oxidation. The filler rod is fed into the molten pool manually (as in gas welding). (3)

8.2 In *reverse polarity* the work piece is connected to the negative side of the power supply and the electrode to the positive side. (2)

8.3
A – Gas supply
B – Wire reel
C – Control system
D – Wire feed unit
E – Power source
F – Gun control
G – Work piece (Any 4 × 1) (4)

Copyright reserved

8.4 8.4.1



SITE WELD

8.4.2

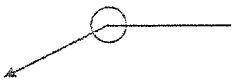

WELD ALL ROUND

8.4.3

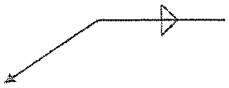

FILLET WELD ON BOTH SIES

(3 × 2) (6)
[15]

QUESTION 9

9.1 Impact test – It is designed to test how brittle the weld is. (2)

9.2 Ductility – Is the property of metal that allows them to be drawn or stretched without rapture (breaking). (3)
[5]

QUESTION 10

10.1 10.1.1
- Soften steel
- Relieve internal stresses
- Reduce brittleness (Any 2 × 1) (2)

10.1.2
- Harden the steel
- Enable the steel to resist wear
- Enable it to cut other metals (Any 2 × 1) (2)

10.2 Austenite is a solid solution of carbon – 1.7% in iron. Only exists in steel above critical range – 1 130 °C. (2)

10.3 Pure iron is called Ferrite. (2)
[8]

TOTAL: 100

Copyright reserved