higher education & training

Department:
Higher Education and Training
REPUBLIC OF SOUTH AFRICA

NATIONAL CERTIFICATE

WELDERS' THEORY N2

(11022082)

4 August 2021 (X-paper)
09:00–12:00

Drawing instruments and nonprogrammable calculators may be used.

This question paper consists of 6 pages and 1 answer sheet.

187Q1G2104

Copyright reserved

DEPARTMENT OF HIGHER EDUCATION AND TRAINING
REPUBLIC OF SOUTH AFRICA

NATIONAL CERTIFICATE
WELDERS' THEORY N2
TIME: 3 HOURS
MARKS: 100

INSTRUCTIONS AND INFORMATION

1. Answer all the questions.
2. Read all the questions carefully.
3. Number the answers according to the numbering system used in this question paper.
4. Do all drawings in pencil.
5.. Write neatly and legibly.

Copyright reserved

QUESTION 1

1.1 Choose a term from COLUMN B that matches a component of the pedestal drilling machine in COLUMN A. Write only the letter (A–G) next to the question number (1.1.1–1.1.5) in the ANSWER BOOK.

COLUMN A	COLUMN B
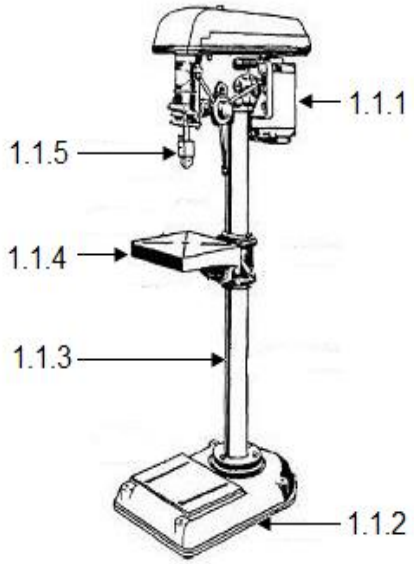	A adjusting lever B spindle C motor D handle E table F base G column

(5 × 1) (5)

1.2 List FIVE safety precautions to be adhered to when working with a bending press. (5)

[10]

QUESTION 2

2.1 Draw and label a pipe stand made from channel iron. The stand will be used to hold a pipe in position so that it does not rotate when being marked off. (3)

2.2 Label the indicated components of the pipe flange in FIGURE 1 by writing the answer next to the letter (A–E) in the ANSWER BOOK.

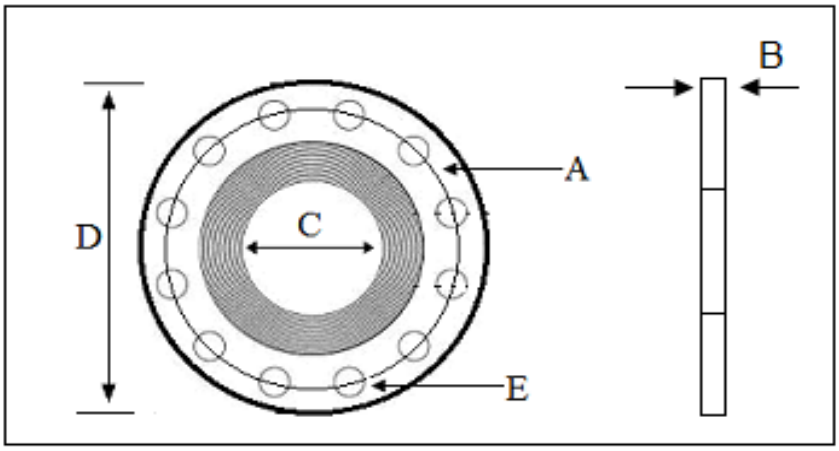

FIGURE 1

(5)

2.3 Draw an equal size angle iron to angle-iron joint at 90° to each other. (5)

2.4 Give the function of a jig. (2)
[15]

QUESTION 3

FIGURE 2 shows a rectangular-to-square transition piece.

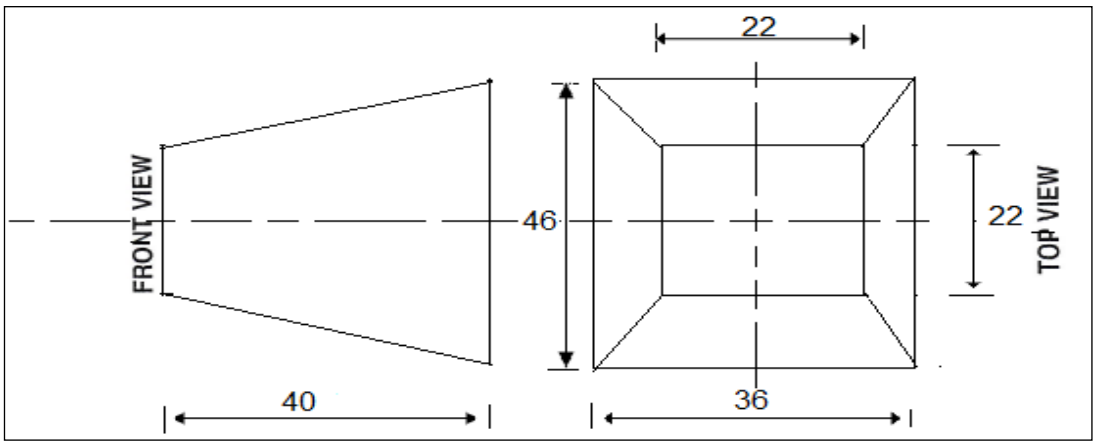

FIGURE 2

3.1 Draw the given views on the attached ANSWER SHEET. Write your EXAMINATION NUMBER on the ANSWER SHEET and place it in the ANSWER BOOK. (3)

3.2 Use the triangulation method to develop the pattern required for the transition piece. (12)
[15]

QUESTION 4

4.1 Name THREE grades of carbon steel. (3)

4.2 Give THREE positive effects of preheating cast iron before welding it. (3)

4.3 State THREE disadvantages of fusion welding. (3)

4.4 Name the TWO groups in which copper is classified. (2)

4.5 Give FOUR characteristics of flux used in oxy-acetylene aluminium welding. (4)
[15]

Copyright reserved

QUESTION 5

5.1 Name the parts of the roof truss shown in FIGURE 3 by choosing a word or words from the list below. Write only the answer next to the part (AO, AC, BO, AB and angle BAO) in the ANSWER BOOK.

pitch; run; slope; span; slope angle; fall; rise; purlin

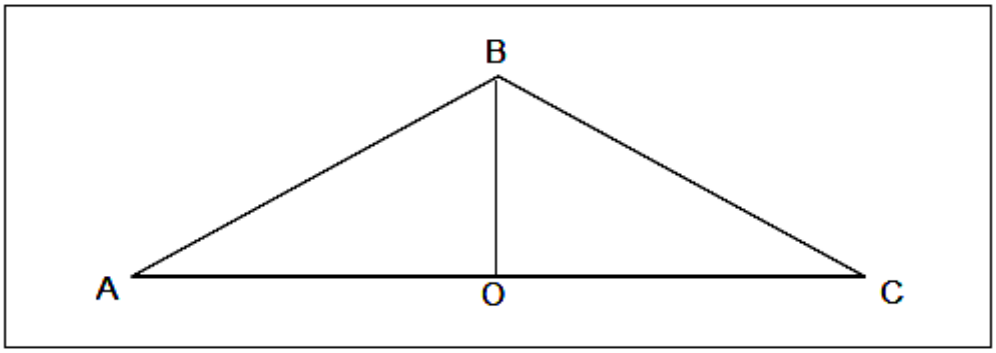

FIGURE 3 (5)

5.2 Name THREE nondestructive weld-testing methods. (3)

5.3 Name FIVE factors to consider before you do any heat treatment of steel. (5)

5.4 Give TWO reasons for normalising steel. (2)
[15]

QUESTION 6

6.1 Indicate whether the following statements are TRUE or FALSE by writing only 'True' or 'False' next to the question number (6.1.1–6.1.5) in the ANSWER BOOK.

6.1.1 The bevel angle is the angle at which the end or edge of a plate is chamfered.

6.1.2 A base metal is also called the parent metal.

6.1.3 Electrodes cover fuses with the base metal to form the weld bead.

6.1.4 The core is the outside of an electrode.

6.1.5 A gaseous shield is a shielding gas that formed when flux melts during welding.

(5 × 1) (5)

6.2 Draw each of the welding symbols below.

6.2.1 Square butt joint

6.2.2 V-butt joint

6.2.3 Bevel butt joint

6.2.4 U-butt joint

6.2.5 J-butt joint

(5 × 1) (5)

6.3 Name FIVE components of the tungsten inert gas (TIG) setup. (5)
[15]

QUESTION 7

7.1 List FIVE safety precautions to adhere to when using and handling oxy-acetylene cylinders. (5)

7.2 Identify the indicated components of the equipment used for gas cutting or gas welding in FIGURE 4 by writing only the answer next to the letter (A–F) in the ANSWER BOOK.

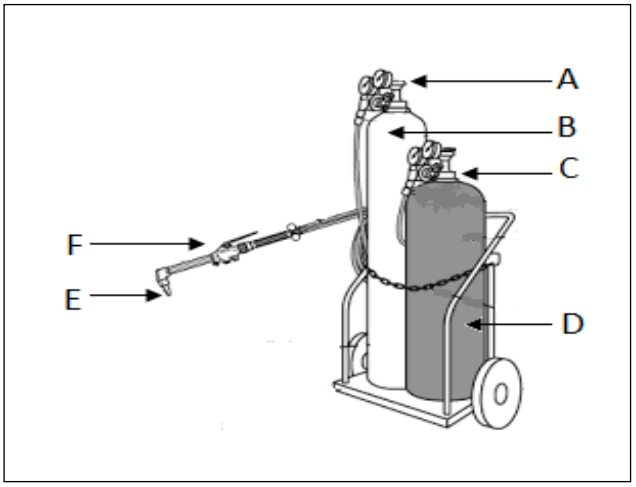

FIGURE 4 (6)

7.3 Give FOUR advantages of metal inert-gas (MIG) welding. (4)
[15]

TOTAL: 100

Copyright reserved

(11022082)

WELDERS' THEORY N2

ANSWER SHEET

EXAMINATION NUMBER:

Copyright reserved