higher education & training

Department:
Higher Education and Training
REPUBLIC OF SOUTH AFRICA

MARKING GUIDELINE

NATIONAL CERTIFICATE

WELDERS' THEORY N2

4 August 2021

This marking guideline consists of 6 pages.

Copyright reserved

QUESTION 1

1.1
1.1.1 C
1.1.2 F
1.1.3 G
1.1.4 E
1.1.5 B

(5 × 1) (5)

1.2
- Know where emergency switches are before starting to work.
- Ensure that all safety guards are in position.
- Work within the limitations of the machine (do not overload the machine).
- Keep body parts away from moving components.
- Wear eye protection against flying pieces of steel. (5)

[10]

QUESTION 2

2.1

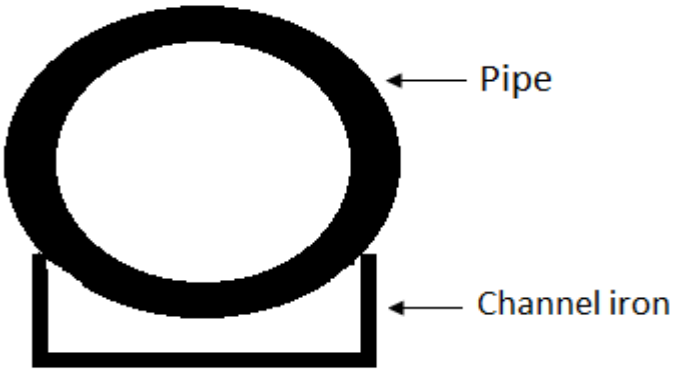

(1 mark for drawing and 2 marks for labelling) (3)

2.2
A – Pitch-circle diameter (PCD)
B – Thickness of flange
C – Inside diameter
D – Outside diameter
E – Drilled hole (5)

2.3

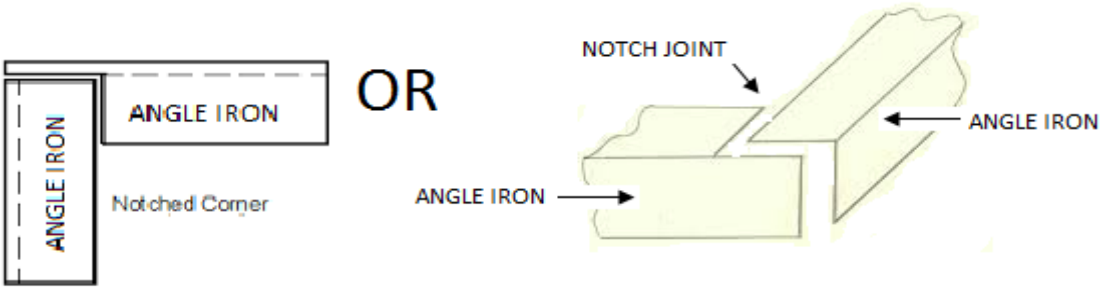

(2 marks for drawing and 3 marks for labelling) (5)

2.4 A jig is a device which holds components✓ to be welded together in proper relation to each other✓ (2)

[15]

QUESTION 3

TRANSITION PIECE
SCALE 1:1

3.1

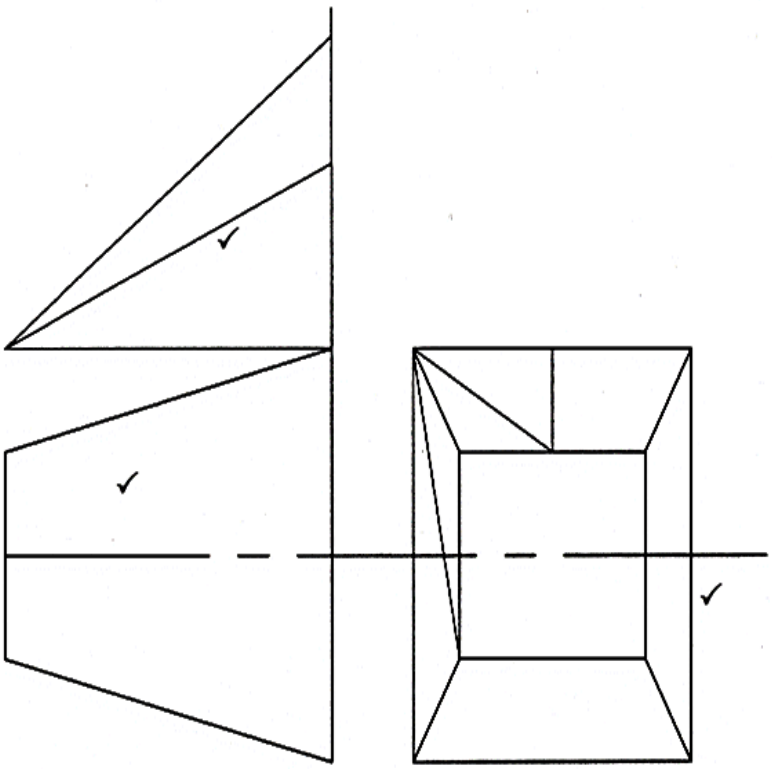

3.2

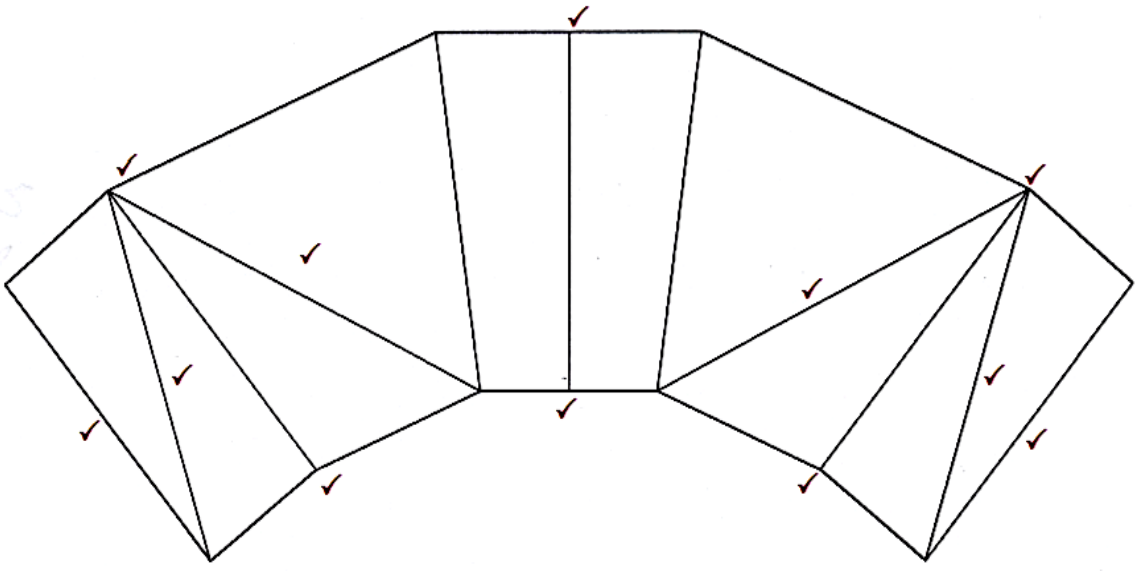

[15]

QUESTION 4

4.1
- High-carbon steel
- Medium-carbon steel
- Low-carbon steel (3)

4.2
- Increases ductility
- Reduces cracking
- Reduces weld shrinkage (3)

4.3
- Distortion of metal.
- Burn-through in metal
- Time-consuming dismantling of workpiece (3)

4.4
- Tough-pitch copper
- Deoxidised copper (2)

4.5
- Capable of dissolving aluminium oxide
- Melt at temperature below that of filler rod
- Correct viscosity
- In fused state density lower than that of molten alloy, floating on surface of weld
- It must contain the right constituents (Any 4 × 1) (4)

[15]

QUESTION 5

5.1
AO – Run
AC – Span
BO – Rise
AB – Slope
Angle BAO – Slope angle (5)

5.2
- Visual inspection
- Radiographic testing
- Magnetic particle testing
- Liquid penetrant testing
- Ultrasonic testing (Any 3 × 1) (3)

5.3
- The chemical composition of the steel
- The heating time
- The heating temperature
- The carbon content
- Quenching media
- The purpose for which the steel is required (Any 5 × 1) (5)

5.4
- Refine structure
- Obtaining uniform structure
- Removing stresses and strain
- Improving strength (Any 2 × 1) (2)

[15]

QUESTION 6

6.1
6.1.1 True
6.1.2 True
6.1.3 True
6.1.4 False
6.1.5 True

(5 × 1) (5)

6.2
6.2.1 
6.2.2 
6.2.3 
6.2.4 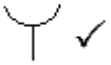
6.2.5 

(5 × 1) (5)

6.3
- Power source
- Foot control
- Inert gas
- Gas cylinder
- Water cooling system
- Welding gun
- Tungsten electrode (Any 5 × 1) (5)

[15]

QUESTION 7

7.1
- Store oxygen and acetylene cylinders apart.
- Store cylinders in a cool area away from direct sunlight.
- Handle cylinders gently.
- Do not drop cylinders.
- Chain cylinders to prevent them from falling over. (5)

7.2
A – Oxygen regulators
B – Oxygen cylinder
C – Acetylene regulator
D – Acetylene cylinder
E – Nozzle
F – Cutting torch/lever (6)

7.3
- Suitable for large jobs
- Fast process
- Less welding skill needed
- Continuous weld with neat finish (4)

[15]

TOTAL: 100

Copyright reserved