higher education & training

Department:
Higher Education and Training
REPUBLIC OF SOUTH AFRICA

T1780**(E)**(A8)T

NATIONAL CERTIFICATE

WELDERS' THEORY N2

(11022082)

8 August 2019 (X-Paper)
09:00–12:00

Nonprogrammable calculators and drawing instruments may be used.

This question paper consists of 6 pages and 1 answer sheet.

Copyright reserved

DEPARTMENT OF HIGHER EDUCATION AND TRAINING
REPUBLIC OF SOUTH AFRICA

NATIONAL CERTIFICATE
WELDERS' THEORY N2
TIME: 3 HOURS
MARKS: 100

INSTRUCTIONS AND INFORMATION

1. Answer ALL the questions.
2. Read ALL the questions carefully.
3. Number the answers according to the numbering system used in this question paper.
4. Answer each question on a NEW page.
5. Answer QUESTION 4 on the ANSWER SHEET provided, remove it from the question paper and place it in the ANSWER BOOK.
6. Write neatly and legibly.

Copyright reserved

QUESTION 1

1.1 FIGURE 1 shows a swage jenny.

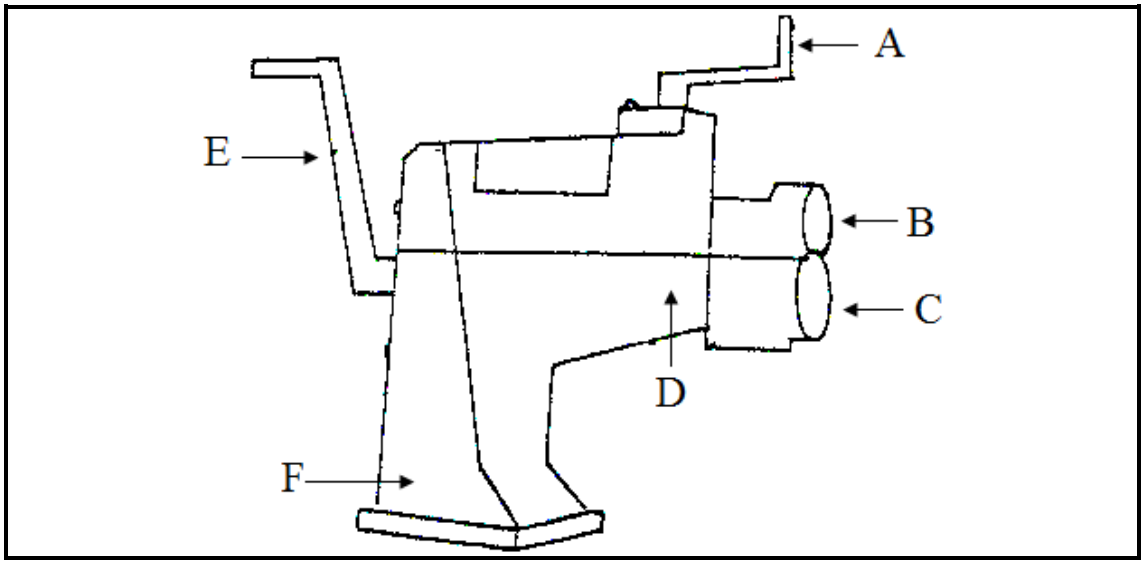

FIGURE 1

Label the swage jenny by writing only the answer next to the letter (A–F) in the ANSWER BOOK. (6 × 1) (6)

1.2 Give FOUR safety precautions to observe when using drilling machines in the workshop. (4)
[10]

QUESTION 2

2.1 Draw a neat sketch of a channel-to-channel joint at 90°. (3)

2.2 Give TWO advantages of using a jig. (2)
[5]

QUESTION 3

3.1 Draw and label an angle iron stand that holds a pipe in position while marking it off. (5)

3.2 Draw a front view of a twelve-hole pipe flange and label the following on the drawing:

- Pitch-centre diameter (PCD)
- Pitch
- Inside diameter (ID)
- Outside diameter (OD)
- Diameter of the hole (5)

[10]

QUESTION 4

FIGURE 2 below shows TWO views of a rectangular-to-square transition piece.

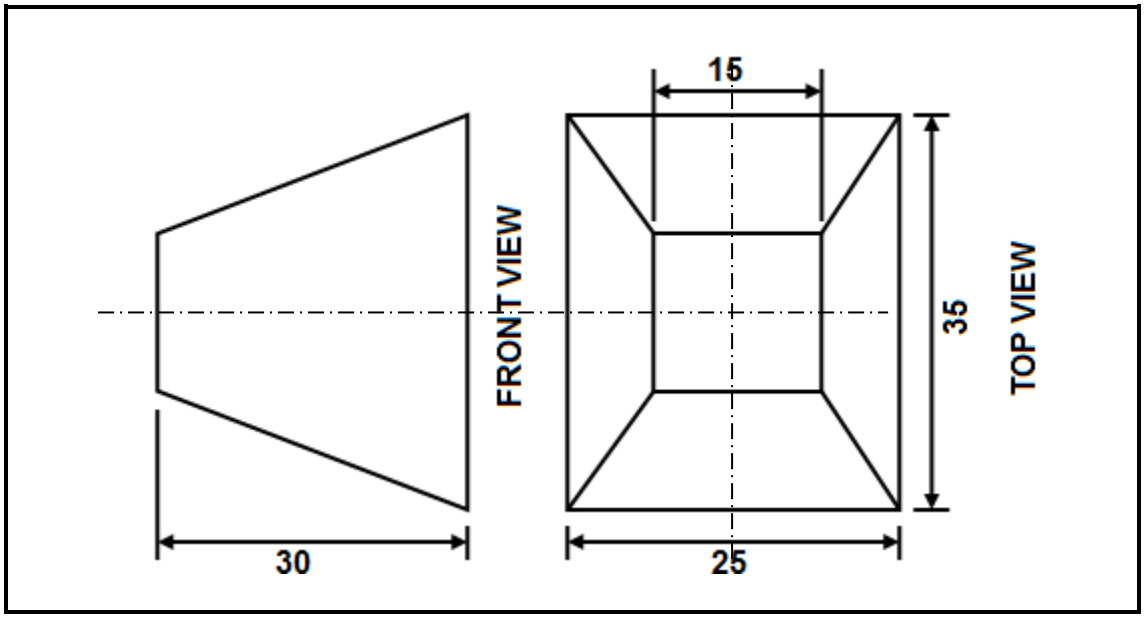

FIGURE 2

Draw the given views on the ANSWER SHEET (attached). Use the triangulation method to develop the pattern of the transition piece. Write your EXAMINATION NUMBER on the ANSWER SHEET and place it in the ANSWER BOOK. **[15]**

QUESTION 5

FIGURE 3 below shows a roof truss.

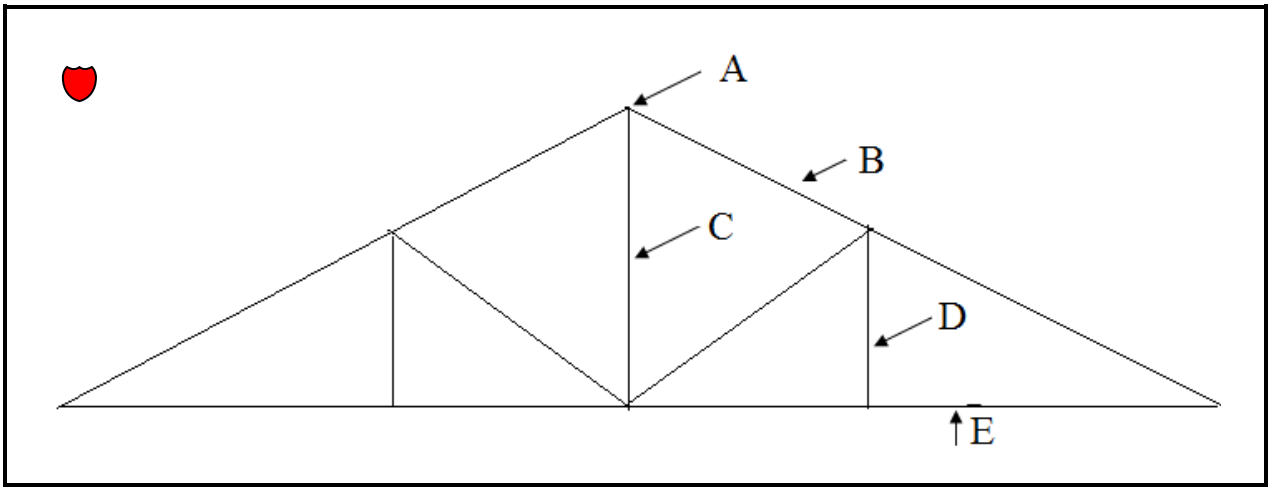

FIGURE 3

Label the roof truss by writing only the answer next to the letter (A–E) in the ANSWER BOOK. (5 × 1) **[5]**

Copyright reserved

QUESTION 6

6.1 Name THREE types of stainless steel. (3)

6.2 List THREE forms of preheating. (3)

6.3 Give THREE advantages of oxy-acetylene fusion-welding of grey cast iron. (3)

6.4 Name TWO groups of copper. (2)

6.5 State FOUR characteristics of flux used in oxy-acetylene aluminium welding. (4)
[15]

QUESTION 7

7.1 List SIX types of contamination on a metal plate that can have an adverse effect when gas cutting or welding. (6)

7.2 List SIX components of an oxy-acetylene gas-welding setup. (6)
[12]

QUESTION 8

8.1 Complete the following paragraph by using the items in the list below. Write only the missing item next to the question number (8.1.1–8.1.5) in the ANSWER BOOK.

6 000; tungsten inert gas (TIG); slag; nonconsumable; argon

Gas tungsten arc welding is also called (8.1.1) …, which uses a (8.1.2) … tungsten electrode. The heat generated is up to (8.1.3) …°C. It produces no (8.1.4) …, sparks, spatter or fumes. An inert gas, either (8.1.5) … or helium, is used. (5 × 1) (5)

8.2 FIGURE 4 shows a welding torch used for gas tungsten arc welding.

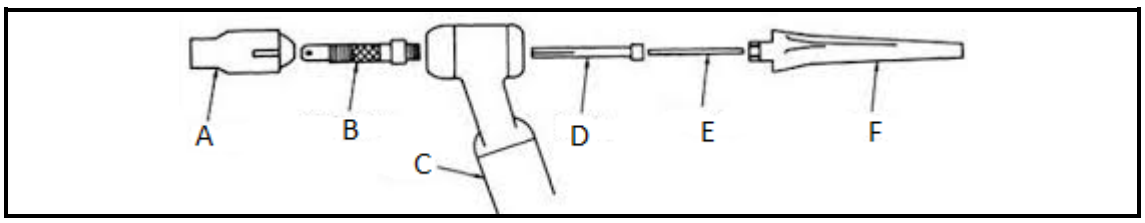

FIGURE 4

Label the welding torch by writing only the answer next to the letter (A–F) in the ANSWER BOOK. (6 × 1) (6)

8.3 Name FOUR basic welding joints. (4)
[15]

QUESTION 9

Explain the liquid penetrant method used in non-destructive welding testing. **[5]**

QUESTION 10

10.1 List FIVE factors to consider before heat treatment can take place. (5)

10.2 State THREE negative effects of applying excessive heat on a welded joint. (3)
[8]

TOTAL: 100

Copyright reserved

ANSWER SHEET

EXAMINATION NUMBER: | | | | | | | | | | | | | |

QUESTION 4

Copyright reserved