higher education & training

Department:
Higher Education and Training
REPUBLIC OF SOUTH AFRICA

MARKING GUIDELINE

NATIONAL CERTIFICATE

WELDERS' THEORY N2

8 AUGUST 2019

This marking guideline consists of 7 pages.

Copyright reserved

QUESTION 1

1.1
A Adjusting handle
B Upper/Top roller
C Lower/Bottom roller
D Bottom shaft/ Driving shaft
E Operating handle
F Housing/Body (6 × 1) (6)

1.2
- Wear goggles to protect the eyes from metal filings that usually fly about during drilling.
- Ensure that the work pieces on pedestal drilling machines are securely clamped.
- Select the correct speed for the size of drill bit that will be used.
- Feed gradually and do not apply more downward pressure on the drill that is needed.
- Do not wear loose clothing like ties that can be hooked by the drill bit, causing serious injuries.
- If you have long hair, wear a hair net to avoid hair being caught by the revolving drill bit.
- Keep your drill bits sharp. (Any relevant 4 × 1)

(4)
[10]

QUESTION 2

2.1

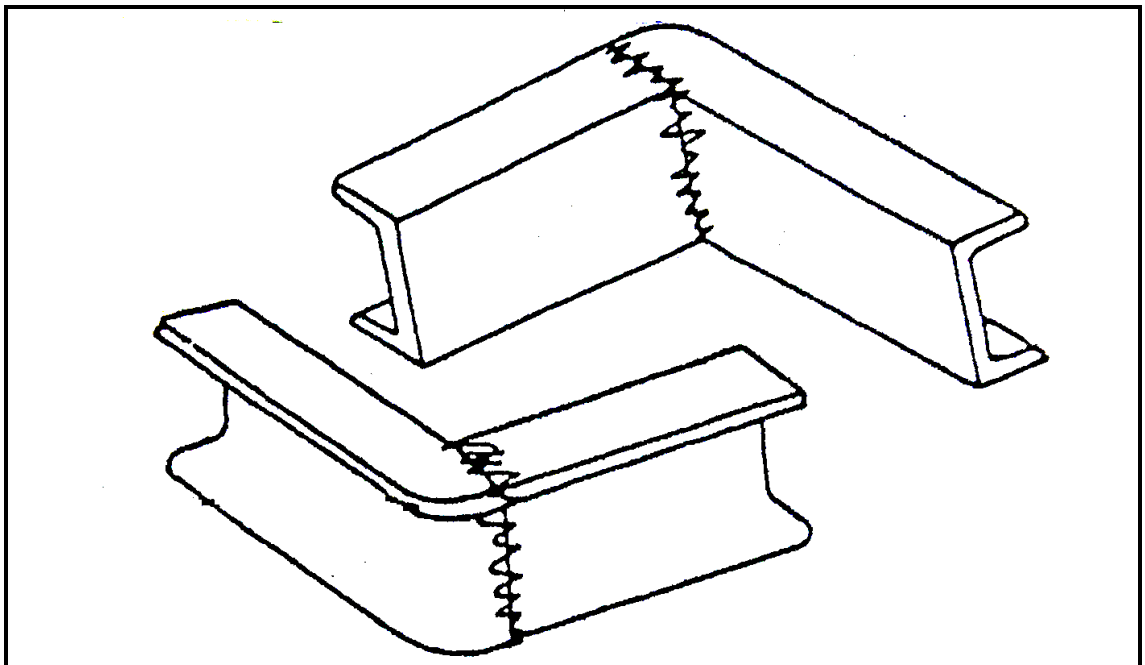

(One mark per channel and one mark for the joint) (3)

2.2
- Ideal for mass production
- Can be used by semiskilled workers
- Quicker to use
- Ensure accuracy

(Any relevant 2 × 1) (2)
[5]

QUESTION 3

3.1

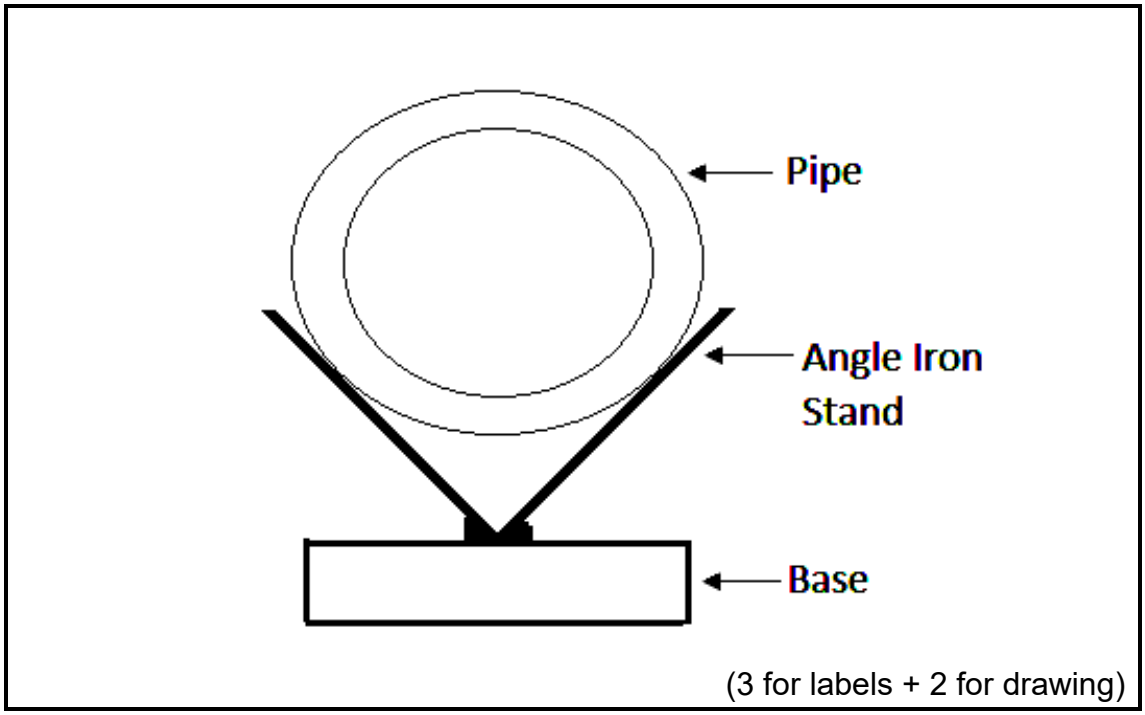

(3 for labels + 2 for drawing) (5)

3.2

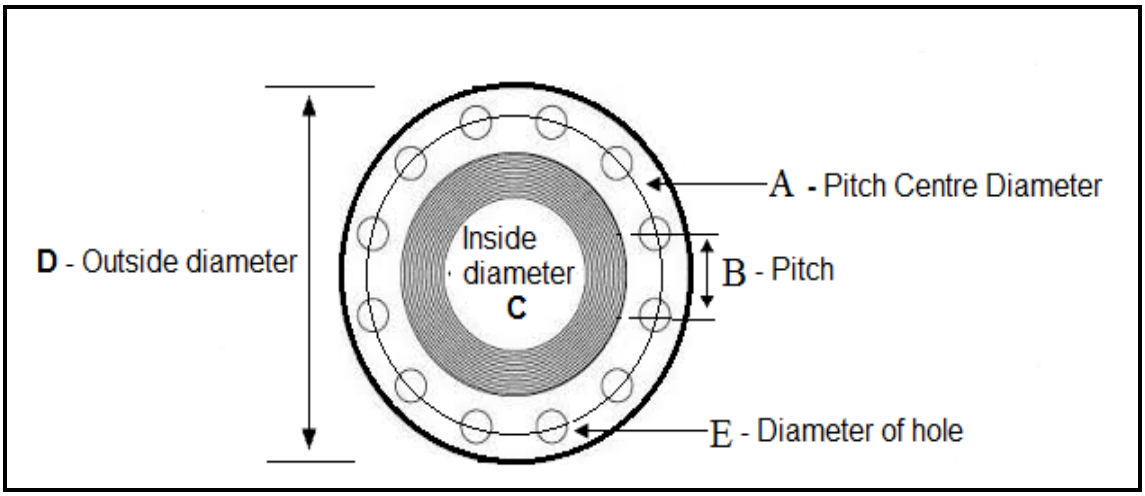

(5)
[10]

QUESTION 4

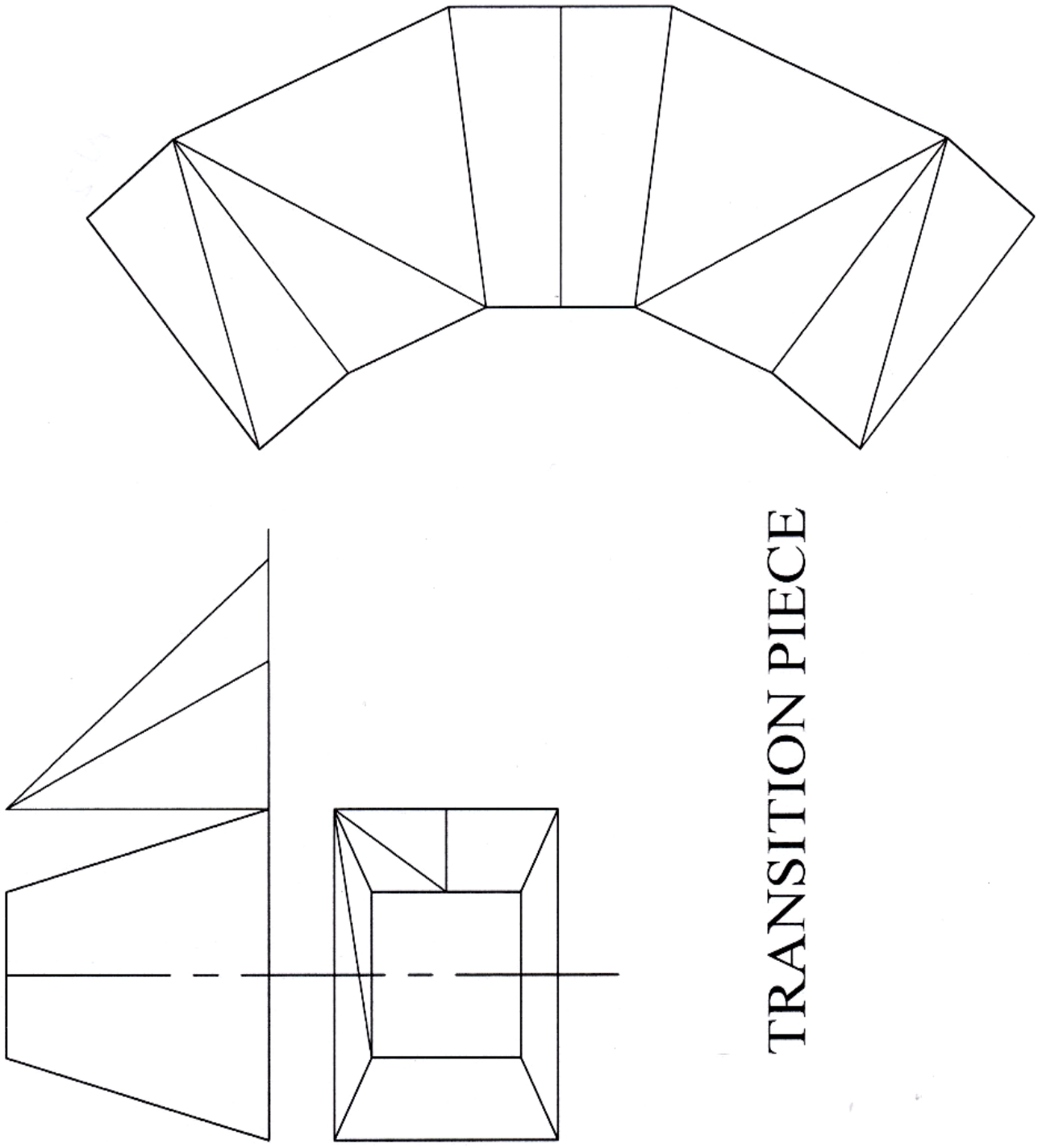

[15]

QUESTION 5

A Apex
B Inclined rafter
C King post
D Strut
E Main tie **[5]**

QUESTION 6

6.1
- Ferritic
- Martensitic
- Duplex
- Austenitic (Any 3 × 1) (3)

6.2
- Local preheating
- Overall preheating
- Indirect preheating (3)

6.3
- There is colour similarity.
- There is no restriction on working temperatures.
- Suitable for all types of machining and grinding. (Any relevant 3 × 1) (3)

6.4
- Tough-pitch copper
- Deoxidised copper (2)

6.5
- The flux must be capable of dissolving aluminium oxide and prevent it from forming.
- It must melt at a temperature below that of the filler rod and the alloy being welded.
- It must have the correct viscosity.
- In the fused state it must have a lower density than the molten alloy – it must float on the surface of the weld.
- It must also contain the right constituents which are chlorides and fluorides of lithium, sodium and potassium (Any relevant 4 × 1) (4)

[15]

QUESTION 7

7.1
- Oxide on the surface
- Flakes
- Oil and grease
- Paint
- Laminated plates
- Solvents (Any relevant 6 × 1) (6)

Copyright reserved

7.2
- Gas regulators
- Gas cylinders
- Nozzle
- Welding torch
- Flashback arrestors
- Gas hoses (Any relevant 6 × 1) (6)

[12]

QUESTION 8

8.1
8.1.1 tungsten inert gas (TIG)
8.1.2 nonconsumable
8.1.3 6 000
8.1.4 slag
8.1.5 argon (5 × 1) (5)

8.2
A Nozzle
B Collet body
C Handle
D Collet
E Tungsten tip / Tungsten electrode
F Cap (6 × 1) (6)

8.3
- Butt joint
- Lap joint
- T-joint
- Edge joint
- Angle joint (Any 4 × 1) (4)

[15]

QUESTION 9

The liquid penetrant method of testing is carried out to detect small defects like cracks and porosity.✓ The weld must be cleaned with a cleaning solvent. This allows the penetrate dye to enter the openings.✓ The liquid penetrant is applied to the weld and seeps into any cracks.✓ When the surface is dry a special absorbent powder✓ is applied to the weld and will draw the penetrant from the surface showing the crack.✓ **[5]**

QUESTION 10

10.1
- Chemical composition of steel
- Heating time
- Heating temperature
- Carbon content
- Quenching media
- Purpose of the steel (Any relevant 5 × 1) (5)

10.2
- High residual stresses may cause warpage and distortion.
- Hardening may take place.
- Ductility will be reduced.
- Toughness of the joint will be reduced. (Any relevant 3 × 1) (3)

[8]

TOTAL: 100

Copyright reserved