higher education & training

Department:
Higher Education and Training
REPUBLIC OF SOUTH AFRICA

T1780(**E**)(A1)T

NATIONAL CERTIFICATE

WELDERS' THEORY N2

(11022082)

1 August 2018 (X-Paper)
09:00–12:00

This question paper consists of 6 pages and 1 diagram sheet.

Copyright reserved

DEPARTMENT OF HIGHER EDUCATION AND TRAINING
REPUBLIC OF SOUTH AFRICA

NATIONAL CERTIFICATE
WELDERS' THEORY N2
TIME: 3 HOURS
MARKS: 100

INSTRUCTIONS AND INFORMATION

1. Answer ALL the questions.
2. Read ALL the questions carefully.
3. Number the answers according to the numbering system used in this question paper.
4. Write your EXAMINATION NUMBER on the DIAGRAM SHEET (attached) and ensure it is removed from the question paper and placed in your ANSWER BOOK even if the question is not answered.
6. Answer each question on a NEW page.
7. Write neatly and legibly.

Copyright reserved

QUESTION 1

1.1 FIGURE 1 shows a box and pan folder. Name the items indicated on the sketch and write only the answer next to the letter (A–F) in the ANSWER BOOK.

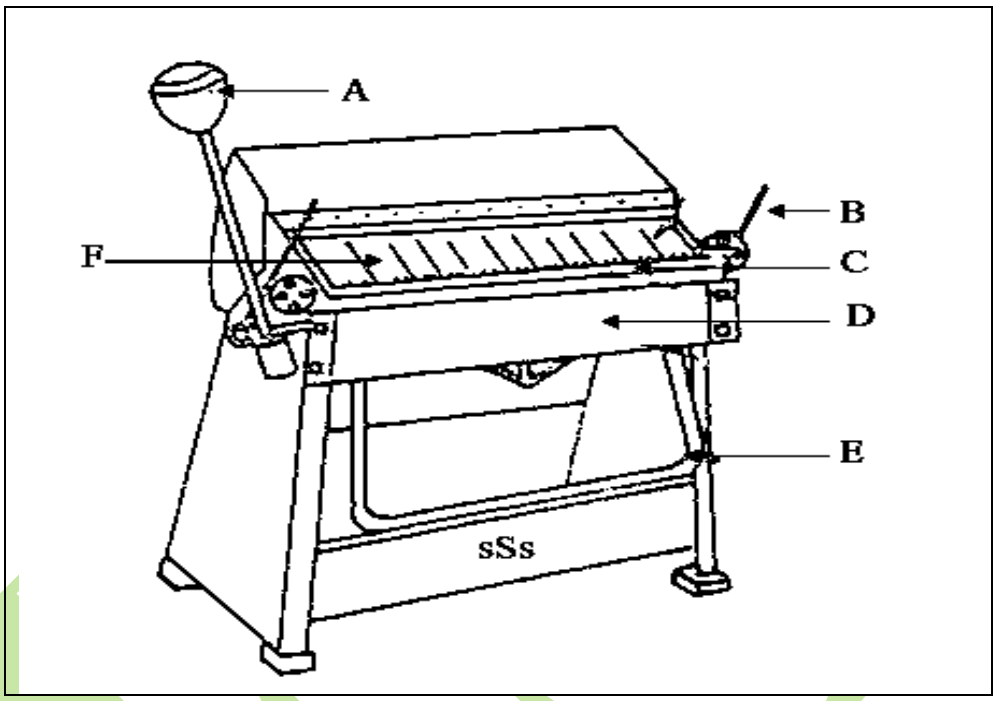

FIGURE 1 (6)

1.2 State FOUR precautions to be observed when working with a radial arm drilling machine. (4)
[10]

QUESTION 2

2.1 Draw a neat, labelled diagram of an angle-to-angle welded joint of unequal sizes. (6)

2.2 What does RSJ stand for? (1)
[7]

QUESTION 3

3.1 Draw a neat front and side view of a T-connection between pipes of unequal diameters. Indicate the following labels in the diagram: larger pipe, smaller pipe, D denotes the saddle depth. (6)

3.2 Name TWO items that are found on a centre finder. (2)
[8]

Copyright reserved

QUESTION 4

FIGURE 2 shows a right cone cut parallel to its base.

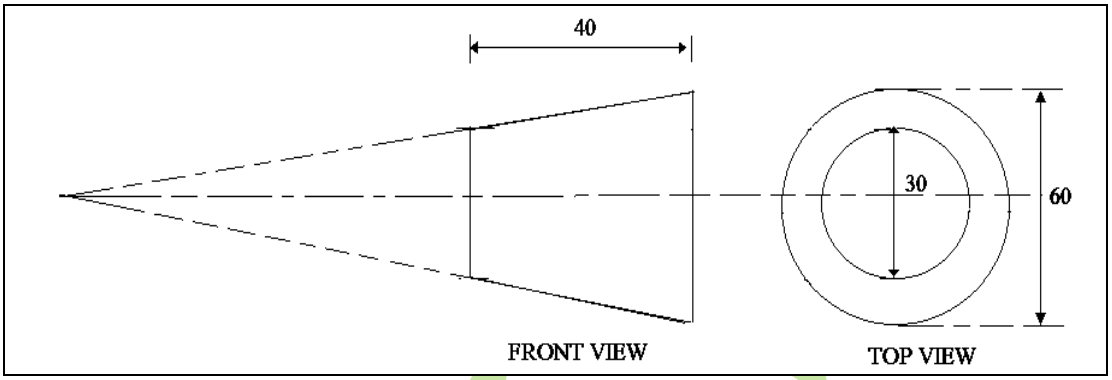

FIGURE 2

4.1 Draw the given views on the DIAGRAM SHEET (attached). (3)

4.2 Use the radial line method to develop the pattern of the right cone. Write your EXAMINATION NUMBER on the DIAGRAM SHEET, detach it from the question paper and place it in the ANSWER BOOK. (12)

[15]

QUESTION 5

Indicate whether the following statements are TRUE or FALSE. Choose the answer and write only 'true' or 'false' next to the question number (5.1–5.5) in the ANSWER BOOK.

5.1 A queen post is a horizontal member in a roof truss.

5.2 The ridge is the top point of the roof.

5.3 The slope of a roof is the ratio between the rise and the run.

5.4 A strut is a structural member that is placed to withstand a compressive force.

5.5 The tie beam of a roof truss is the member that spans the full length of the truss.

(5 × 1) **[5]**

QUESTION 6

6.1 Name FIVE types of nonferrous metals. (5)

6.2 Name THREE different types of cast iron. (3)

Copyright reserved

6.3 Name TWO forms of preheating. (2)

6.4 State FIVE disadvantages of metallic arc welding. (5)
[15]

QUESTION 7

7.1 FIGURE 3 shows a cross-sectional view of an acetylene cylinder. Name the parts indicated on the sketch by writing only the answer next to the letter (A–F) in the ANSWER BOOK.

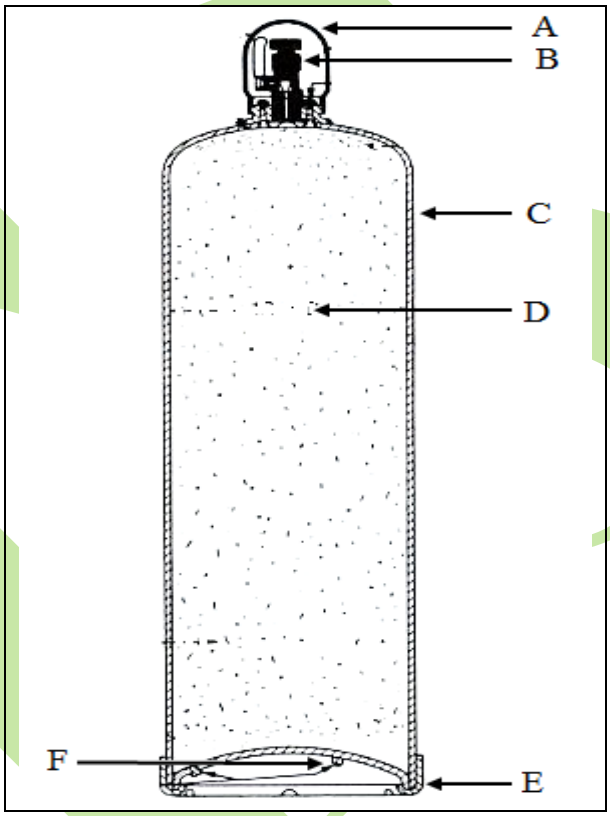

FIGURE 3 (6)

7.2 Explain the operation of the low-pressure oxy-acetylene welding system. (4)

7.3 Name the TWO types of profile cutting machines. (2)
[12]

QUESTION 8

8.1 Name FIVE components that make up the metal inert gas (MIG) system. (5)

8.2 State the difference between *preheating* and *post-heating*. (4)

8.3 Draw a neat, labelled sketch showing the shielded metal arc welding (SMAW) process. (6)
[15]

QUESTION 9

State FIVE welding defects that X-ray testing can detect. **[5]**

QUESTION 10

10.1 State FIVE factors to be considered before heat-treating steel. (5)

10.2 Name THREE case-hardening methods. (3)
[8]

TOTAL: 100

Copyright reserved

DIAGRAM SHEET

EXAMINATION NUMBER:

Copyright reserved