higher education & training

Department:
Higher Education and Training
REPUBLIC OF SOUTH AFRICA

NATIONAL CERTIFICATE

WELDERS' THEORY N2

(11022082)

20 April 2021 (X-paper)
09:00–12:00

Drawing instruments may be used.

This question paper consists of 6 pages and 1 drawing sheet.

272Q1A2120

Copyright reserved

DEPARTMENT OF HIGHER EDUCATION AND TRAINING
REPUBLIC OF SOUTH AFRICA

NATIONAL CERTIFICATE
WELDERS' THEORY N2
TIME: 3 HOURS
MARKS: 100

INSTRUCTIONS AND INFORMATION

1. Answer all the questions.
2. Read all the questions carefully.
3. Number the answers according to the numbering system used in this question paper.
4. Start each question on a new page.
5. Make all drawings in pencil.
6. Use drawing instruments for QUESTION 3.
7. Write your EXAMINATION NUMBER on the DRAWING SHEET and place it in the ANSWER BOOK.
8. Write neatly and legibly.

Copyright reserved

QUESTION 1

1.1 Choose a label from COLUMN B that matches a component in COLUMN A. Write only the letter (A–I) next to the question number (1.1.1–1.1.5) in the ANSWER BOOK.

COLUMN A	COLUMN B
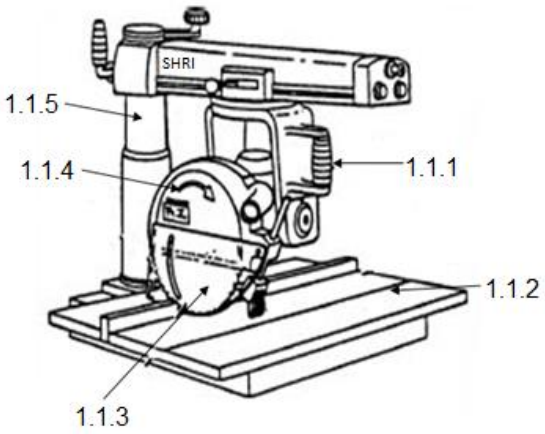	A table B base C power cable D blade guard E direction of rotation F handle G column H operating handle I drive motor

(5 × 1) (5)

1.2 List FIVE safety precautions to observe when working with a reciprocating power saw. (5)

1.3 Draw a neat, labelled diagram showing the saddle depth of a T-connection between two pipes of unequal diameters. (5)

1.4 Define the term *nominal diameter* as it relates to a pipe. (2)

1.5 Draw a neat diagram of an eight-hole pipe flange showing the following:

- Pitch-circle diameter
- Inside diameter
- Outside diameter

(3)
[20]

Copyright reserved

QUESTION 2

2.1 Draw a neat, labelled diagram showing the connection of a channel iron notched to a rolled steel joist (RSJ) at 90° to each other. (7)

2.2 Give ONE function of a gusset plate. (1)

2.3 List SIX safety precautions to observe when handling oxy-acetylene cylinders. (6)

2.4 Explain how a cutting nozzle is cleaned by using a nozzle cleaner. (5)

2.5 Name the type of flame that gives off excessive smoke when setting up a neutral flame. (1)

[20]

QUESTION 3

3.1 FIGURE 1 shows two views of a transition piece.

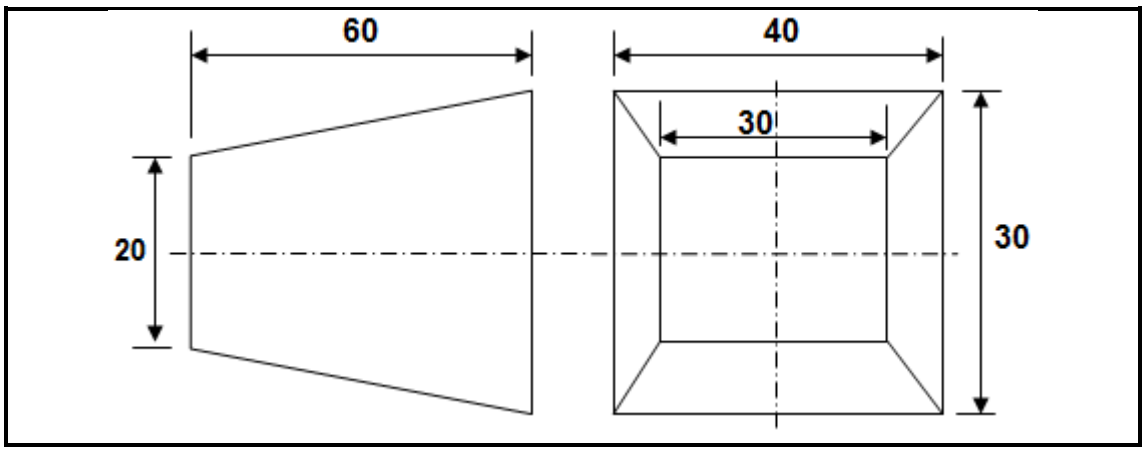

FIGURE 1

3.1.1 Draw the given views of the transition piece on the DRAWING SHEET (attached). (3)

3.1.2 Use the triangulation method to develop the pattern of the transition piece on the DRAWING SHEET (attached). (12)

3.2 Choose a description from COLUMN B that matches a term in COLUMN A. Write only the letter (A–F) next to the question number (3.2.1–3.2.5) in the ANSWER BOOK.

COLUMN A		COLUMN B	
3.2.1	Queen post	A	top point of a roof
3.2.2	King post	B	vertical distance from the tie beam to the uppermost point of the roof truss
3.2.3	Ridge	C	distance from the centre of one wall to the adjacent wall
3.2.4	Slope	D	vertical member placed between the centre and heel of a roof truss
3.2.5	Rise	E	joins the apex of the truss to the main tie beam
		F	ratio between the rise and run

(5 × 1) (5)
[20]

QUESTION 4

4.1 Give THREE disadvantages of metallic arc welding of cast iron. (3)

4.2 Give FIVE uses of low-carbon steel. (5)

4.3 Name the TWO main groups of copper. (2)

4.4 Explain the *hot shortness* of copper. (5)

4.5 FIGURE 2 shows a simple nick-bend test done on a welded workpiece.

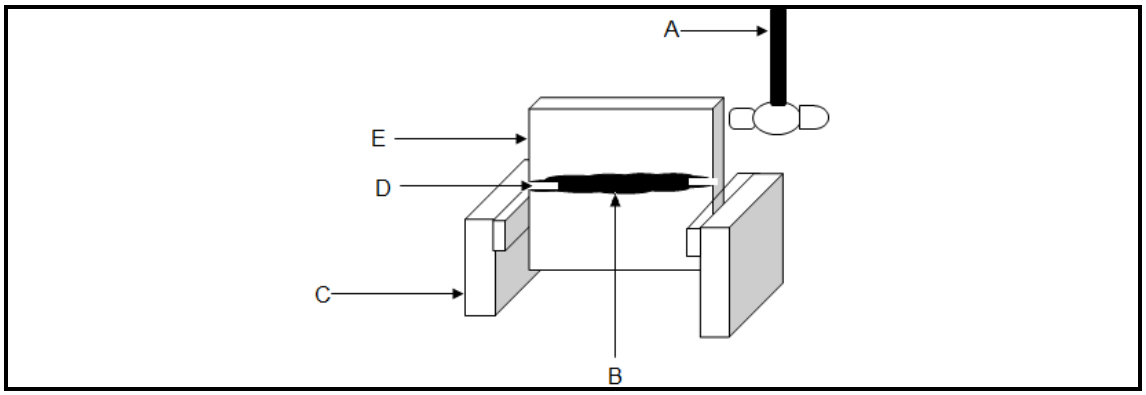

FIGURE 2

Label the components by writing only the answer next to the letter (A–E) in the ANSWER BOOK. (5 × 1) (5)
[20]

QUESTION 5

5.1	Explain the function of the electrode covering (flux) used for shielded metal arc welding (SMAW).	(5)
5.2	List the FIVE main components that make up a metal inert gas (MIG) welding setup.	(5)
5.3	Give TWO causes of spatter.	(2)
5.4	Explain the process of pack carburising.	(5)
5.5	Give THREE methods of carrying out case-hardening on steel.	(3)
		[20]

TOTAL 100

Copyright reserved

DIAGRAM SHEET

EXAMINATION NUMBER: | | | | | | | | | | | | |

QUESTION 3

Copyright reserved