higher education & training

Department:
Higher Education and Training
REPUBLIC OF SOUTH AFRICA

MARKING GUIDELINE

NATIONAL CERTIFICATE

WELDERS' THEORY N2

20 April 2021

This marking guideline consists of 6 pages.

Copyright reserved

QUESTION 1

1.1 1.1.1 F
1.1.2 A
1.1.3 D
1.1.4 E
1.1.5 G

(5 × 1) (5)

1.2
- Ensure that the workpiece is securely clamped.
- Do not cut hard material.
- Try to have at least three teeth in contact with the workpiece at all times.
- Ensure that there is enough cutting fluid.
- Ensure that the blade is correctly tensioned. (5)

1.3

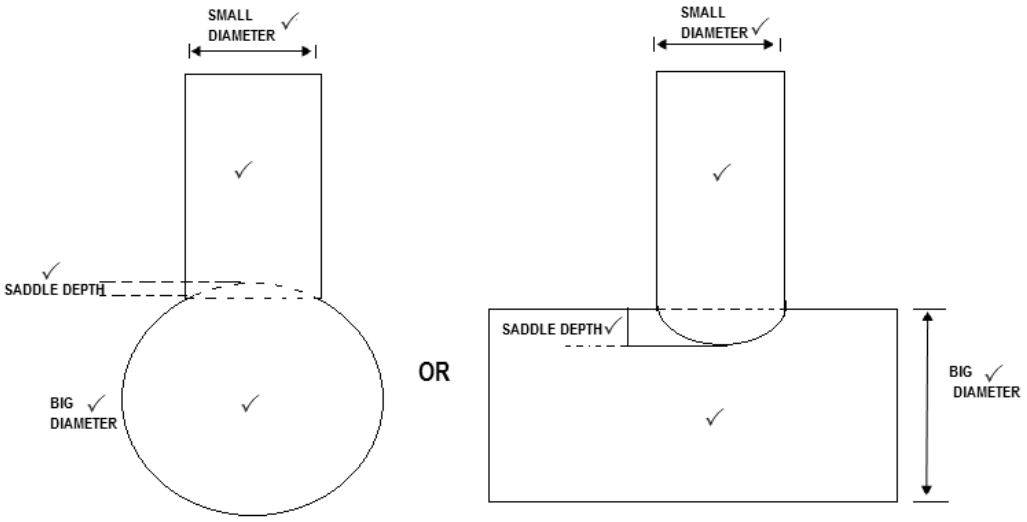

(5)

1.4 Nominal diameter refers to the inside diameter of a pipe. (2)

1.5

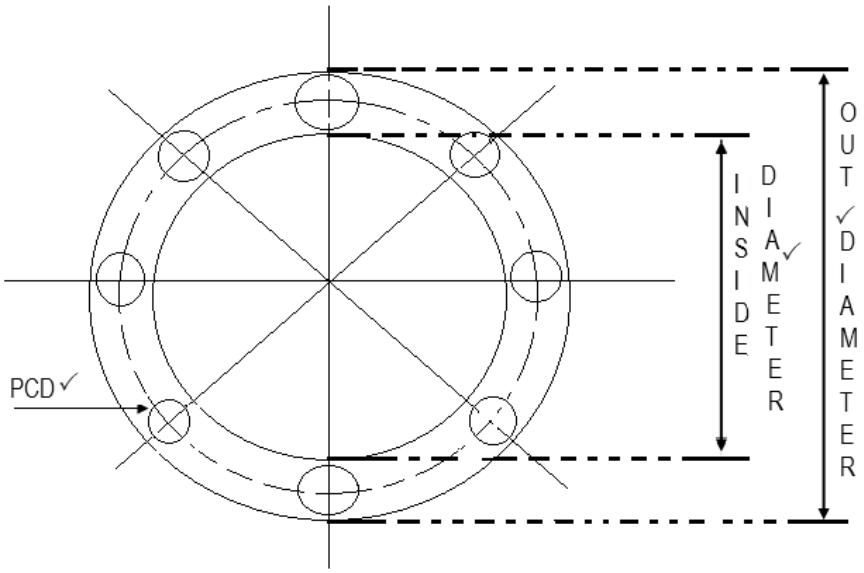

(3)
[20]

QUESTION 2

2.1

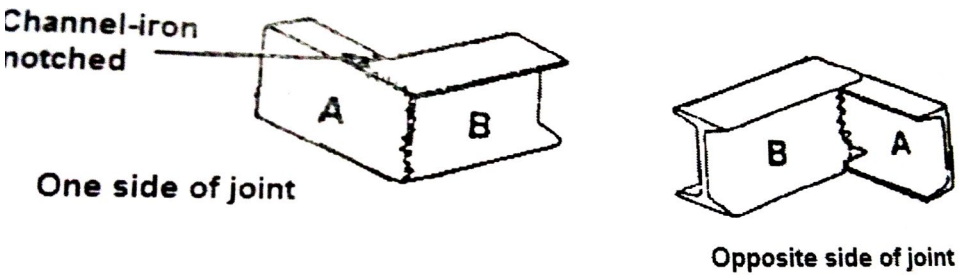

(3 for labels + 4 for the drawing) (7)

2.2 A gusset plate is a flat plate cut to a particular shape that helps to join rolled steel sections together. (1)

2.3
- Store oxygen and acetylene cylinders separately.
- Store cylinders upright.
- Ensure that cylinders are chained.
- Store cylinders in a dry room.
- Store cylinders in a ventilated area.
- Store empty and full cylinders separately.
- Ensure cylinders are transported by a trolley and not rolled on the ground.
- Do not drop cylinders down when moving from one point to another.

(Any 6 × 1) (6)

2.4 Choose the correct needle from the nozzle-cleaning set.✓ Ensure that the needle is not too big.✓ Gently insert the needle into the blowhole of the cutting nozzle✓ and move the needle in and out of the nozzle.✓ Repeat until the hole is clean and gently tap the nozzle to expel the dirt.✓ (5)

2.5 Carburising flame (1)

[20]

QUESTION 3

3.1

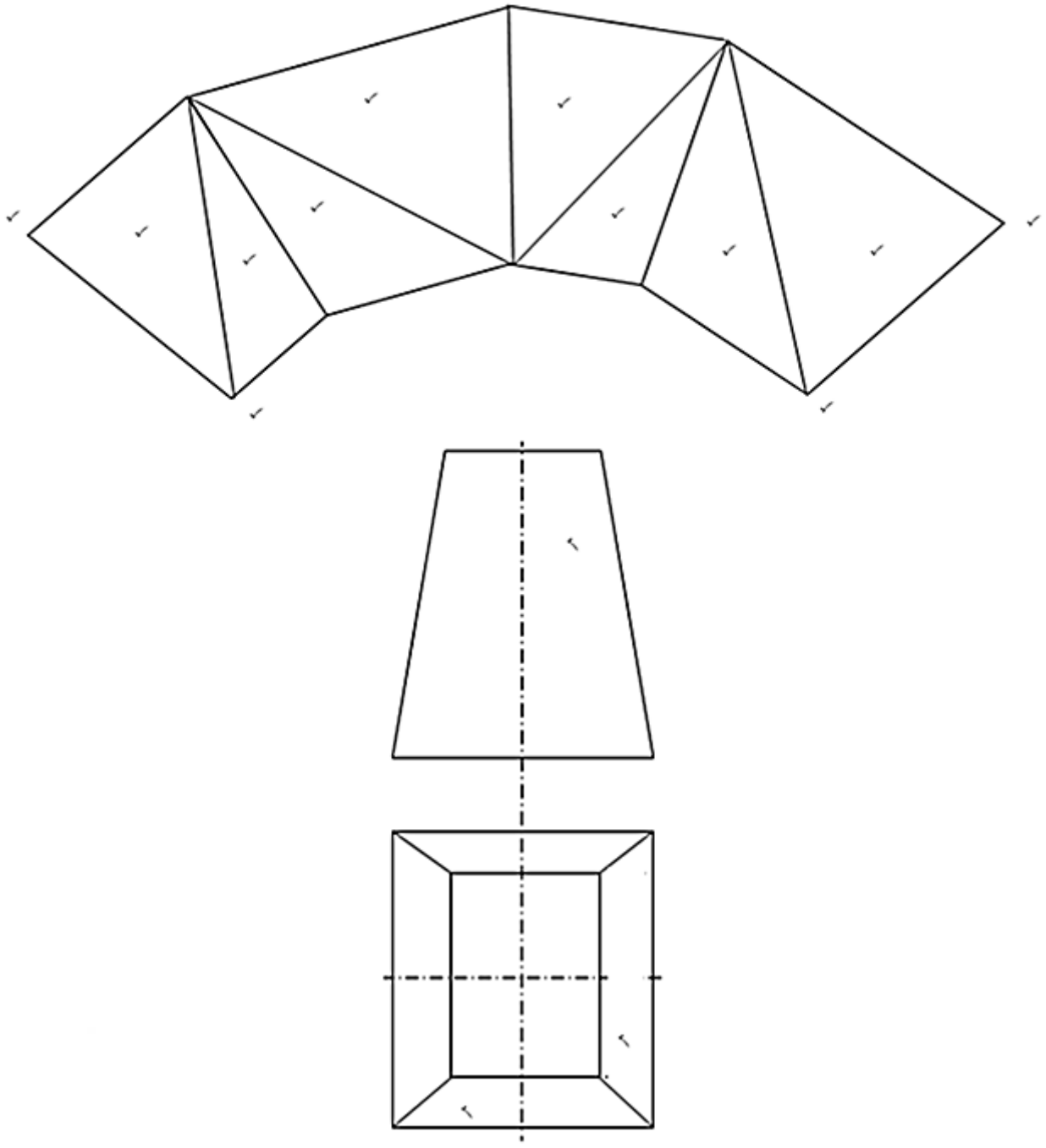

(3 + 12) (15)

3.2

3.2.1	D
3.2.2	E
3.2.3	A
3.2.4	F
3.2.5	B

(5 × 1) (5)
[20]

QUESTION 4

4.1
- If the material is not preheated, martensite forms at the weld boundaries.
- Hard spots form due to cooling of the weld.
- High-nickel electrodes are expensive.
- If high preheating has to be used, the advantages over bronze-welding are lost. (Any 3 × 1) (3)

4.2
- Burglar guards
- Window frames
- Car ports
- Steel structures
- Frying pans
- Welding rods
- Doorframes (Any 5 × 1) (5)

4.3
- Tough-pitch copper
- Deoxidised copper (2)

4.4 When copper is heated to its melting temperature✓ a stage is reached where the copper becomes very weak and this is called hot shortness.✓ During this stage the copper is solid✓ and did not fuse together✓ – the slightest knock or bump will distort the metal.✓ (5)

4.5 A – Hammer/Hammer handle
B – Weld on the workpiece
C – Clamps/Vice jaws
D – Saw cut on the weld
E – Workpiece (5)
[20]

QUESTION 5

5.1 The flux fuses with the base metal to form the weld bead.✓ The weld bead is a deposit resulting from a run of welding.✓ The flux is a fusible material✓ on the electrode that melts during welding to protect✓ the molten metal from oxidation and to remove impurities from the weld.✓ (5)

5.2
- Power source
- Wire-feed unit
- Welding gun
- Gas-feed unit
- Gas flow meter
- Inert gas (Any 5 × 1) (5)

5.3
- Faulty electrode
- Arc length too long
- Current too high (Any 2 × 1) (2)

5.4 The bottom of the cast-iron box is covered with a layer of carburising mixture.✓ A layer of the parts to be hardened is then placed in the box✓ and another layer of carburising mixture is filled.✓ The box is sealed and placed in a furnace. The furnace is heated to between 850 and 950 °C.✓ The box with the content is left to soak in the furnace between 3–5 hours whereafter the parts are quenched in water or oil.✓ (5)

5.5
- Box method (carbonisation)
- Bath method (cyaniding)
- Gas method (nitriding) (3)

[20]

TOTAL: 100

Copyright reserved