higher education & training

Department:
Higher Education and Training
REPUBLIC OF SOUTH AFRICA

NATIONAL CERTIFICATE

WELDERS' THEORY N2

(11022082)

8 April 2020 (X-paper)
09:00–12:00

This question paper consists of 7 pages.

179Q1A2008

Copyright reserved

DEPARTMENT OF HIGHER EDUCATION AND TRAINING
REPUBLIC OF SOUTH AFRICA

NATIONAL CERTIFICATE
WELDERS' THEORY N2
TIME: 3 HOURS
MARKS: 100

INSTRUCTIONS AND INFORMATION

1. Answer all the questions.
2. Read all the questions carefully.
3. Number the answers according to the numbering system used in this question paper.
4. Drawing instruments must be used for QUESTION 3.
5. Drawings should be in pencil.
6. Write neatly and legibly.

Copyright reserved

QUESTION 1

1.1 Choose a term from COLUMN B that matches the component in COLUMN A. Write only the letter (A–J) next to the question number (1.1.1–1.1.8) in the ANSWER BOOK.

COLUMN A	COLUMN B
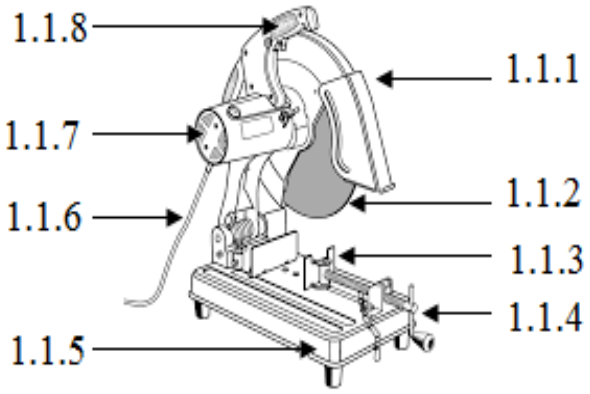	A clamp B base C power cable D guard E cutting disc F vice handle G column H operating handle I drive motor J blade

(8 × 1) (8)

1.2 Name TWO safety precautions when working with a pedestal grinder. (2)

1.3 Draw a neat, labelled diagram of a centre finder showing the following components marking the centre of a pipe:

- Striking face of centre punch
- Bubble indicator
- Protractor
- V shaped frame
- Tip of centre punch (5)

1.4 Draw a neat, labelled diagram of a six-hole flange showing the following:

- Pitch circle diameter (PCD)
- Inside diameter (ID)
- Flange thickness
- Outside diameter (OD) (5)

[20]

QUESTION 2

2.1 Indicate whether the following statements are TRUE or FALSE by writing only 'True' or 'False' next to the question number (2.1.1–2.1.10) in the ANSWER BOOK.

2.1.1 An abrasive is a substance containing no sharp projecting edges that may penetrate and cut away material.

2.1.2 A bevel is an angular cut.

2.1.3 Reciprocating means the back and forth or the up and down movement of machinery.

2.1.4 Mitring is the cutting of a section in order to form a corner of a specific angle.

2.1.5 A gusset is a flat plate, cut into a particular shape, helping to join rolled steel sections together.

2.1.6 An apex is the lowest point of a roof truss.

2.1.7 A main tie is the long horizontal member at the top of the roof truss.

2.1.8 Assembly aids are simple devices usually made of scrap steel sections like angle iron.

2.1.9 Jigs are structures holding parts together for tacking or welding.

2.1.10 RSJ stands for rusted steel joist.

(10 × 1) (10)

2.2 FIGURE 1 shows different types of flames set during an oxy-acetylene process.

Name each type of flame (A–C) by writing the answer next to the letter (A–C) in the ANSWER BOOK.

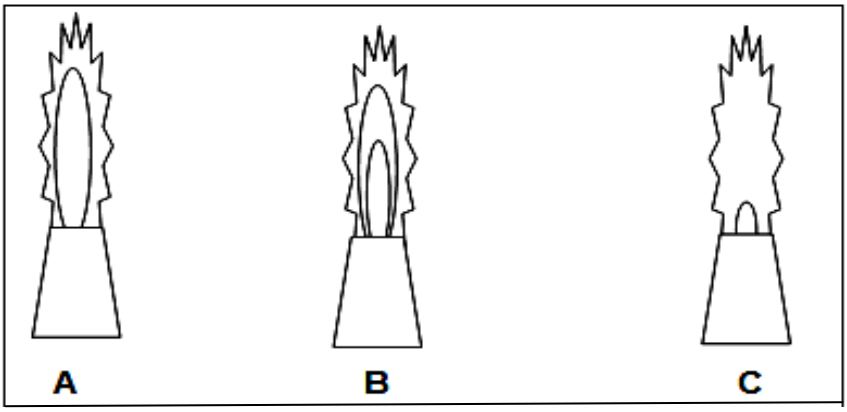

(3)

FIGURE 1

2.3 FIGURE 2 shows the equipment used for oxy-acetylene cutting and welding.

Identify the marked components by writing the answer next to the letter (A–F) in the ANSWER BOOK.

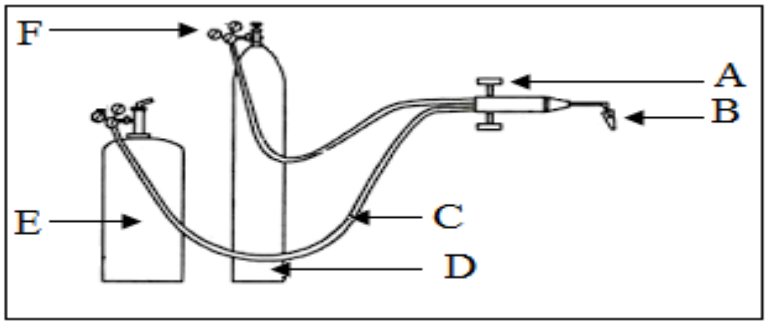

FIGURE 2 (6)

2.4 What is the purpose of a heating nozzle? (1)

[20]

QUESTION 3

3.1 FIGURE 3 shows the development of a square to square truncated pyramid.

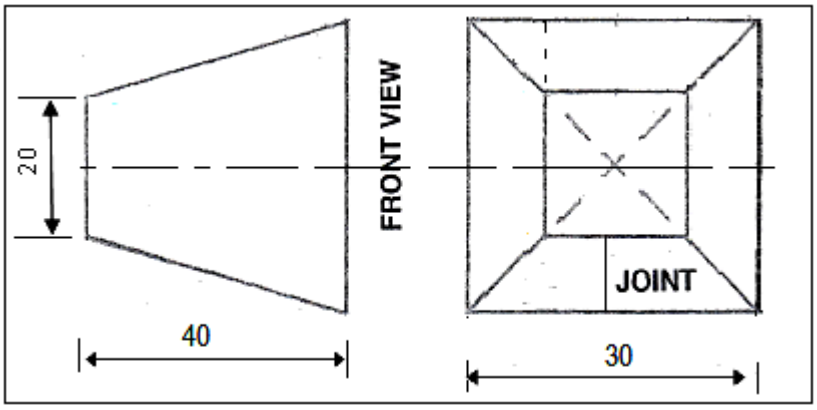

FIGURE 3

3.1.1 Draw the given views on the DRAWING SHEET (attached). (3)

3.1.2 Develop the pattern of the pyramid using the radial line method on the DRAWING SHEET used for QUESTION 3.1.1.

NOTE: Write your EXAMINATION NUMBER on the DRAWING SHEET and place it in the ANSWER BOOK. (12)

NOTE: Write your EXAMINATION NUMBER on the DRAWING SHEET and place it in the ANSWER BOOK.

3.2 Draw a neat, labelled diagram of a pitched roof truss showing the following:

- Apex
- Inclined rafter
- King post
- Queen post
- Tie beam (5)

[20]

QUESTION 4

4.1 Name THREE types of cast iron. (3)

4.2 Explain how grey cast iron is welded using oxy-acetylene fusion welding. (6)

4.3 Tabulate THREE advantages and THREE disadvantages of metallic arc welding of cast-iron. (3 × 2) (6)

4.4 Name FIVE types of destructive testing on a welded work piece. (5)
[20]

QUESTION 5

5.1 Draw a neat, labelled diagram of the main components of a shielded metal arc-welding (SMAW) setup. (5)

5.2 Why does the tungsten inert gas torch have a collet cap at the rear end of the tungsten electrode? (5)

5.3 Explain the metal inert gas (MIG) welding process. (5)

5.4 Describe the pearlite structure of steel. (5)
[20]

TOTAL: 100

Copyright reserved

DRAWING SHEET

QUESTION 3 **EXAMINATION NUMBER:** | | | | | | | | | | | | | |

Copyright reserved