higher education & training

Department:
Higher Education and Training
REPUBLIC OF SOUTH AFRICA

MARKING GUIDELINE

NATIONAL CERTIFICATE

WELDERS' THEORY N2

8 April 2020

This marking guideline consists of 6 pages.

Copyright reserved

QUESTION 1

1.1

1.1.1	D
1.1.2	E
1.1.3	A
1.1.4	F
1.1.5	B
1.1.6	C
1.1.7	I
1.1.8	H

(8 × 1) (8)

1.2

- Ensure that the gap between the rest and stone is not more than 3 mm.
- Check if the stone is dressed correctly and not damaged.
- Check if the guards are secured on the grinding stones.
- Check if the shield is secured in front of the grinding stone.
- Ensure the pedestal grinder is secured to the stand and the stand is secured to the ground. (Any 2 × 1) (2)

1.3

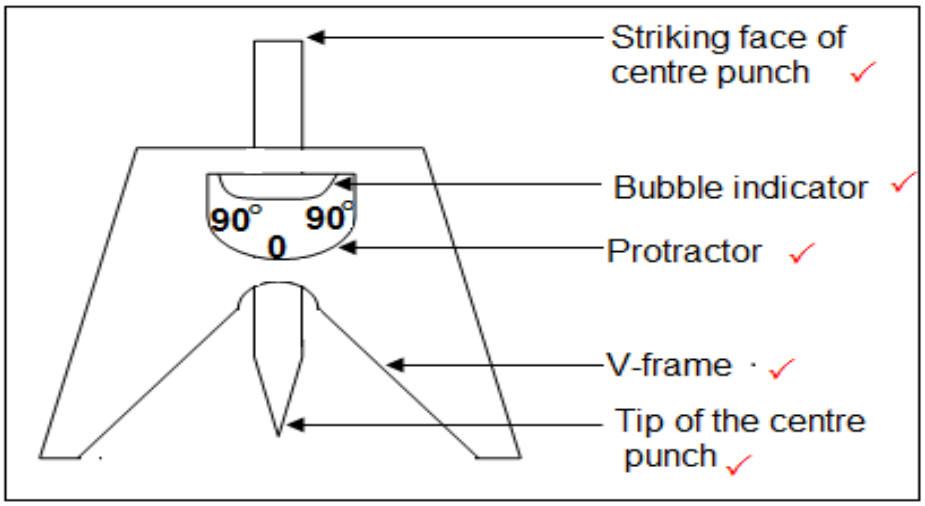

(5)

1.4

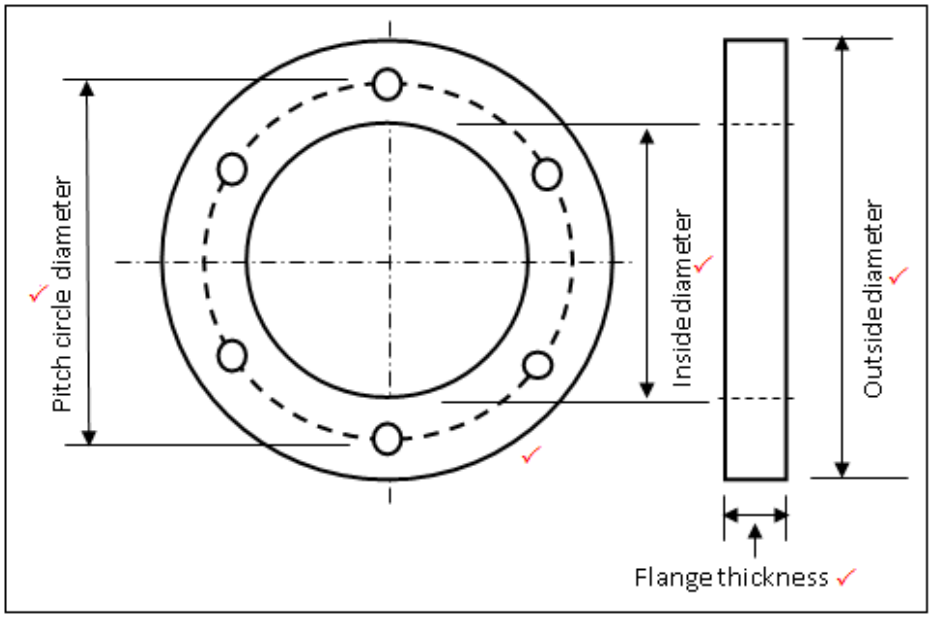

(5)
[20]

QUESTION 2

2.1
2.1.1 False
2.1.2 True
2.1.3 True
2.1.4 True
2.1.5 True
2.1.6 False
2.1.7 False
2.1.8 True
2.1.9 True
2.1.10 False

(10 × 1) (10)

2.2
A – Carburising flame
B – Oxidising flame
C – Neutral flame (3)

2.3
A – Oxygen control valve
B – Nozzle/Cutting torch nozzle
C – Acetylene hose
D – Oxygen cylinder
E – Acetylene cylinder
F – Oxygen regulator (6)

2.4 Used for preheating of material (1)
[20]

QUESTION 3

3.1

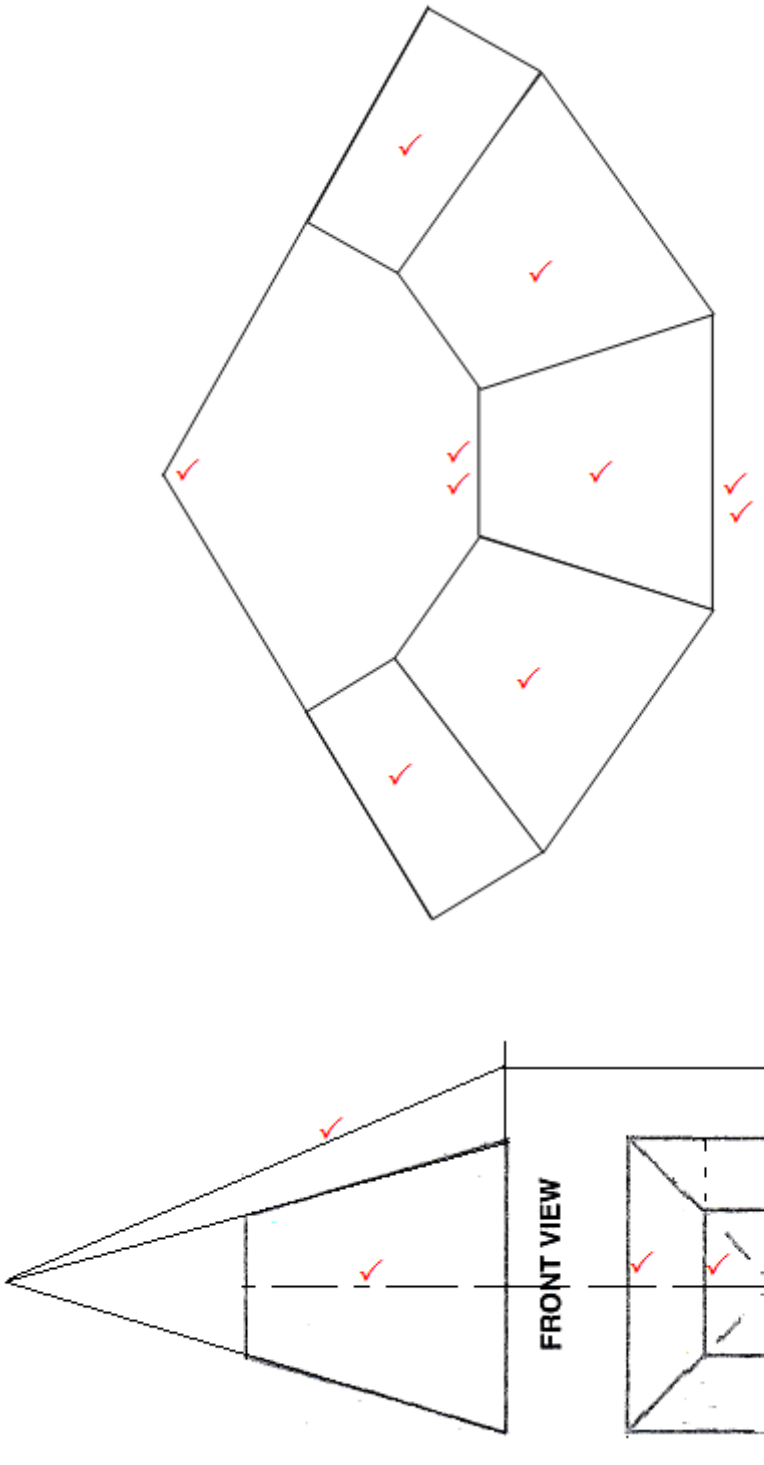

(15)

3.2

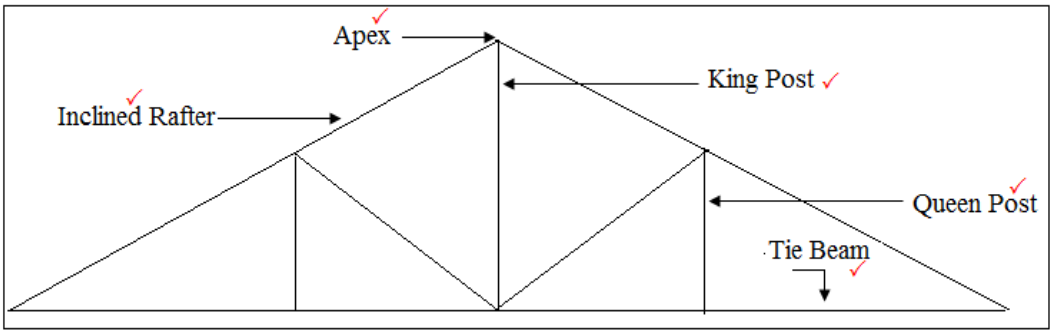

(5)
[20]

QUESTION 4

4.1
- Grey cast iron
- White cast iron
- Malleable cast iron (3)

4.2 Begin by removing grease, oil and dirt.✓ Use a grinder and form a V-shaped groove on the crack.✓ Preheat the workpiece in a furnace to 753 °C.✓ Remove the workpiece from the furnace and cover it with a blanket.✓ Use a neutral flame to gas weld, ensuring the correct filler rod and flux for cast iron are used. After welding, place the workpiece back in the furnace and heat to 753 °C.✓ Allow to cool off, clean the welded area with a wire brush and inspect the welding.✓ (6)

4.3

ADVANTAGES	DISADVANTAGES
• Quicker • Saves gasses • Workpieces and machines welded in position without being stripped • Satisfactory weld achieved quickly (Any THREE)	• Martensite formed if not pre-heated • Hard spots formed due to cooling off • High nickel electrodes expensive • Preheating destroys advantage over bronze-welding (Any THREE)

(3 × 2) (6)

4.4
- Tensile test
- Nickel-bend test
- Guided bend test
- Free-bend test
- Impact test (5)

[20]

QUESTION 5

5.1

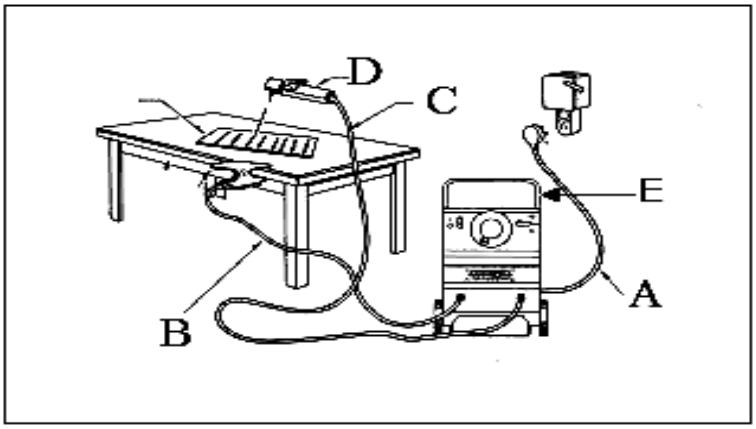

A – Input power cable
B – Earth clamp lead
C – Electrode lead
D – Electrode holder
E – Welding machine (5)

5.2 The tungsten electrode is supplied in lengths from 76,2mm to 304,8mm.✓ The rear end cannot be allowed to touch any part of the workpiece.✓ If this happens then it will arc✓ damaging the workpiece and possibly injuring the person who is welding.✓ The collet cap screws onto the torch preventing the rear end of the tungsten electrode to be exposed.✓ (5)

5.3 An electric arc is formed between a consumable electrode (wire) and a metal work-piece.✓ The arc heats the metal, causing it to melt and join.✓ A shielding gas is also passed through the welding torch along with the electrode.✓ The shielding gas prevents contamination of the weld.✓ MIG/GMAW uses a direct current source.✓ (5)

5.4 Pearlite consists of layers of ferrite and cementite.✓ Cementite is the normal form of carbon found in steel.✓ Pearlite consists of 0,83% carbon and is formed when the steel drops below 695 °C✓ during the cooling process of molten form.✓ Pearlite consists of 87% ferrite and 13% cementite.✓ (5)

[20]

TOTAL: 100

Copyright reserved