higher education & training

Department:
Higher Education and Training
REPUBLIC OF SOUTH AFRICA

T1780**(E)**(A9)T

# NATIONAL CERTIFICATE

# WELDERS' THEORY N2

(11022082)

**9 April 2019 (X-Paper)**
**09:00–12:00**

**Non-programmable calculators and drawing instruments may be used.**

**This question paper consists of 6 pages and 1 diagram sheet.**

Copyright reserved

# DEPARTMENT OF HIGHER EDUCATION AND TRAINING
# REPUBLIC OF SOUTH AFRICA

NATIONAL CERTIFICATE
WELDERS' THEORY N2
TIME: 3 HOURS
MARKS: 100

---

**INSTRUCTIONS AND INFORMATION**

1. Answer ALL the questions.
2. Read ALL the questions carefully.
3. Number the answers according to the numbering system used in this question paper.
4. Start each question on a NEW page.
5. All drawings must be completed in pencil.
6. Write your EXAMINATION NUMBER on the ANSWER SHEET and place it in the ANSWER BOOK.
7. Write neatly and legibly.

---

Copyright reserved 

## QUESTION 1

1.1 FIGURE 1 shows a guillotine used for shearing flat-sheet material.

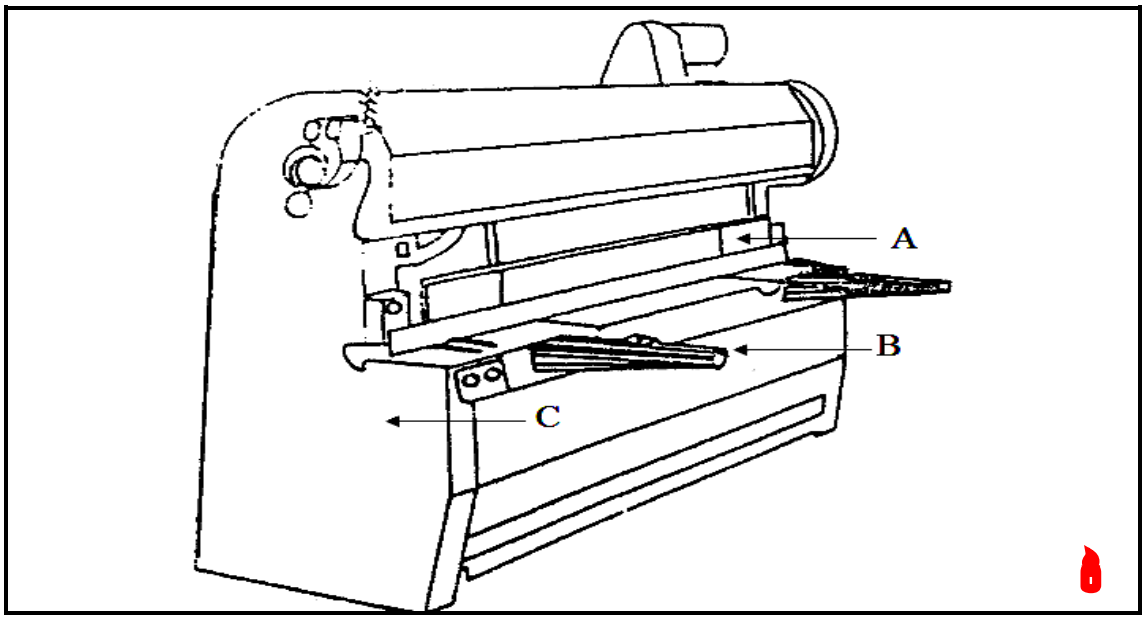


**FIGURE 1**

Label the parts of the guillotine by writing only the name of each part next to the letter (A–C) in the ANSWER BOOK. (3 × 1) (3)

1.2 Explain the working principal of a guillotine. (3)

1.3 Give FOUR safety precautions to observe when working with a guillotine. (4)
**[10]**

## QUESTION 2

Draw and label the side views of each of the following rolled steel sections:

2.1.1 Channel iron

2.1.2 Angle iron

2.1.3 I-beam

2.1.4 Lip channel

(4 × 2) **[8]**

## QUESTION 3

3.1 FIGURE 2 shows a cross-sectional view of a pipe.

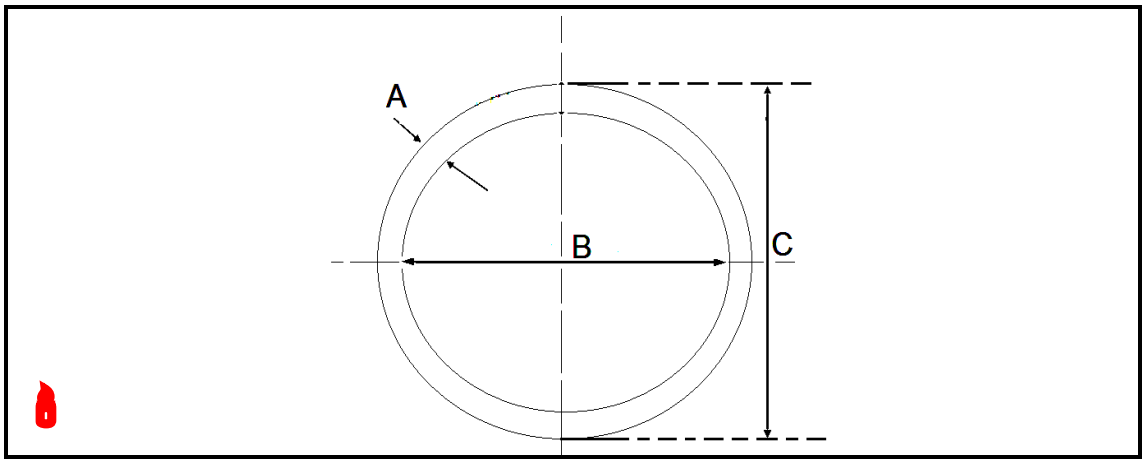


**FIGURE 2**

Label the items by writing only the answer next to the letter (A–C) in the ANSWER BOOK. (3 × 1) (3)

3.2 List FOUR parts that make up a contour marker. (4)

**[7]**

## QUESTION 4

FIGURE 3 shows two views of a square pyramid hood.

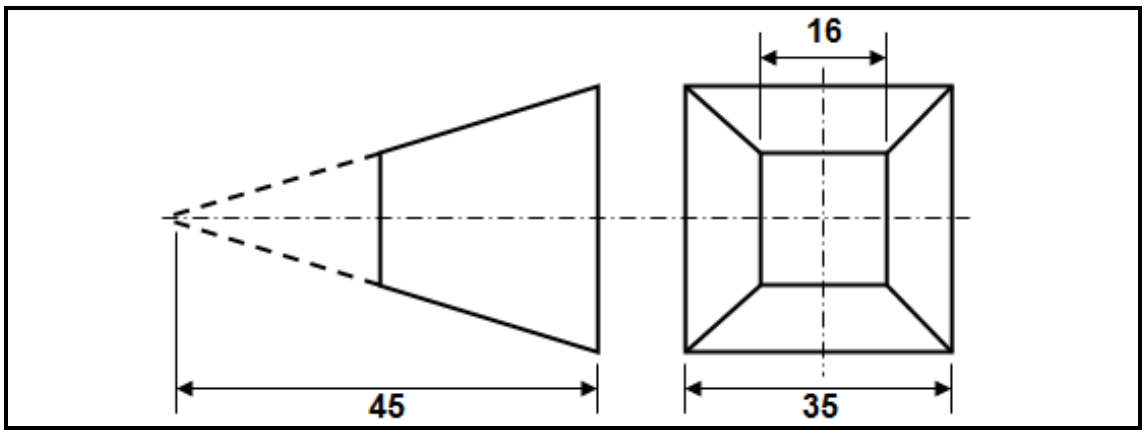


**FIGURE 3**

4.1 Draw the given views on the ANSWER SHEET (attached). (3)

4.2 Use the radial-line method to draw the development of the pattern of the hood.

Write your EXAMINATION NUMBER on the ANSWER SHEET and place it in the ANSWER BOOK. (12)

**[15]**

Copyright reserved 

## QUESTION 5

Draw a neat sketch of a pitched roof truss and label the run, span and rise. **[5]**

## QUESTION 6

6.1 Name THREE types of cast iron. (3)

6.2 Explain how the step-back method of welding is carried out. (5)

6.3 List FIVE household items manufactured from stainless steel. (5)

6.4 Give ONE difference between ferrous and non-ferrous metals. (2)

**[15]**

## QUESTION 7

7.1 List FIVE safety precautions to consider when storing oxy-acetylene cylinders. (5)

7.2 Name TWO types of oxy-acetylene welding systems. (2)

7.3 Explain the correct procedure to follow when lighting a cutting torch. (5)

**[12]**

## QUESTION 8

8.1 Indicate whether the following statements are TRUE or FALSE. Choose the answer and write only 'True' or 'False' next to the question number (8.1.1–8.1.5) in the ANSWER BOOK.

8.1.1 Base metal is also called the parent metal.

8.1.2 Slag forms at the bottom of a weld.

8.1.3 A root run is the first run deposited in the root of a joint.

8.1.4 Preheating is applied before welding can take place.

8.1.5 The heat-affected zone is the portion of the base metal of which microstructures have been altered by the heat of the welding.

(5 × 1) (5)

8.2 List FOUR components that make up the shielded metal arc welding (SMAW) system. (4)

Copyright reserved 

8.3 FIGURE 4 shows a gas tungsten arc welding torch.

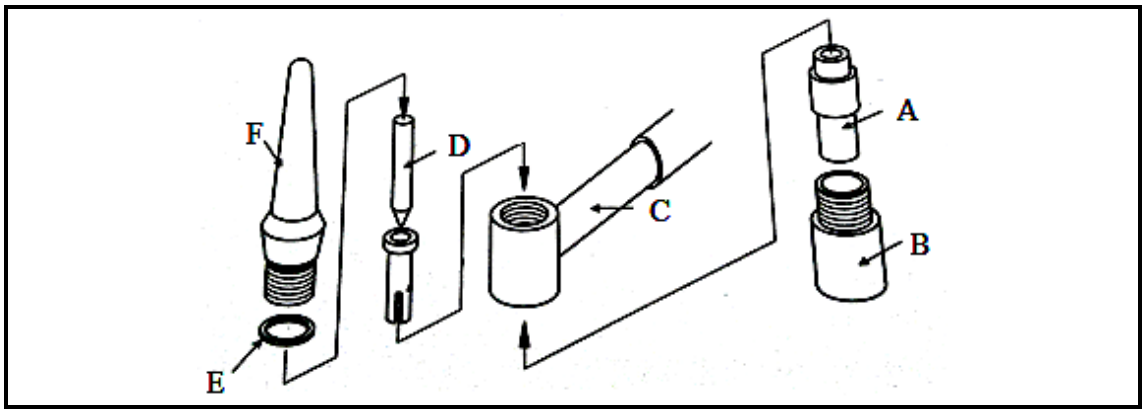


**FIGURE 4**

Label the items by writing only the answer next to the letter (A–F) in the ANSWER BOOK. (6 × 1) (6)
**[15]**

## QUESTION 9

List FIVE non-destructive welding-testing methods. **[5]**

## QUESTION 10

10.1 Define the term *annealing.* (5)

10.2 Give THREE reasons for hardening steel. (3)
**[8]**

**TOTAL: 100**

Copyright reserved

**ANSWER SHEET** **EXAMINATION NUMBER:**

| | | | | | | | | | | | | |
|---|---|---|---|---|---|---|---|---|---|---|---|---|
| | | | | | | | | | | | | |

## QUESTION 4

4.1

(3)

4.2

(12)
**[15]**

Copyright reserved