higher education & training

Department:
Higher Education and Training
REPUBLIC OF SOUTH AFRICA

T1780**(E)**(A6)T

NATIONAL CERTIFICATE

WELDERS' THEORY N2

(11022082)

6 April 2018 (X-Paper)
09:00–12:00

This question paper consists of 6 pages and 1 answer sheet.

Copyright reserved

DEPARTMENT OF HIGHER EDUCATION AND TRAINING
REPUBLIC OF SOUTH AFRICA

NATIONAL CERTIFICATE
WELDERS' THEORY N2
TIME: 3 HOURS
MARKS: 100

INSTRUCTIONS AND INFORMATION

1. Answer ALL the questions.
2. Read ALL the questions carefully.
3. Number the answers according to the numbering system used in this question paper.
4. Start each question on a new page.
5. Ensure that the ANSWER SHEET is removed from the question paper and put in the ANSWER BOOK even if the question is not answered.
6. Write neatly and legibly.

Copyright reserved

QUESTION 1

1.1 FIGURE 1 below shows a punching, shearing and cropping machine.

Identify the labelled parts by writing the answer next to the letter (A–F) in the ANSWER BOOK.

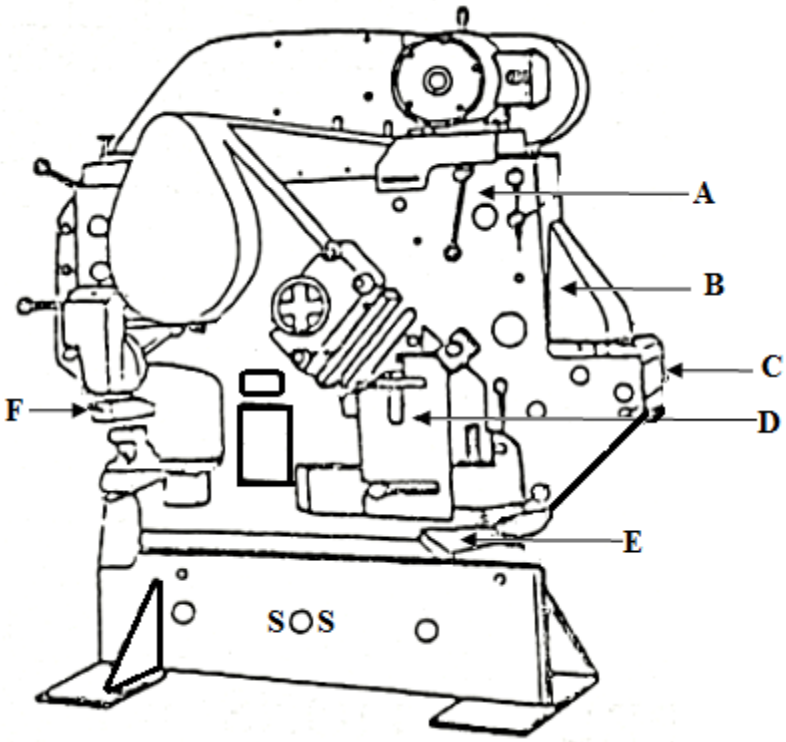

FIGURE 1

(6)

1.2 State FOUR safety precautions to be observed when working with a radial-arm drilling machine. (4)

[10]

QUESTION 2

2.1 List FOUR advantages of using a jig when assembling steel components. (4)

2.2 Explain the term *roof truss*. (3)

[7]

QUESTION 3

3.1 Draw a neat sketch of an eight-hole pipe flange showing the pitch circle diameter (PCD) and the pitch in the ANSWER BOOK. (5)

3.2 FIGURE 2 below shows a sectional view of a pipe.

Identify the labelled parts by writing the answer next to the letter (A–C) in the ANSWER BOOK.

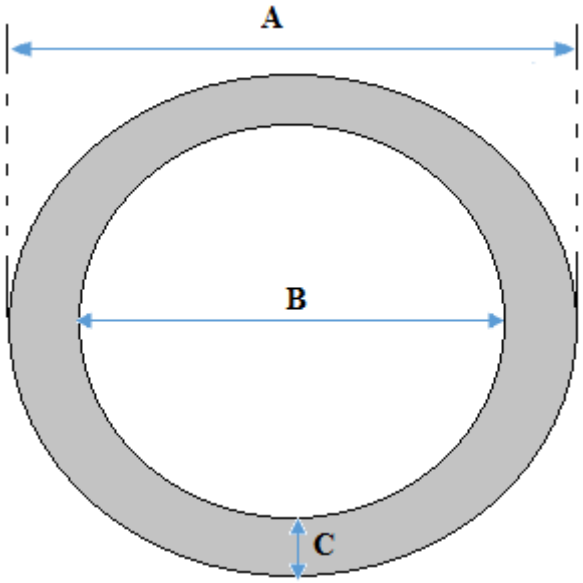

FIGURE 2

(3)
[8]

QUESTION 4

FIGURE 3 below shows a development drawing of a square-to-square hood.

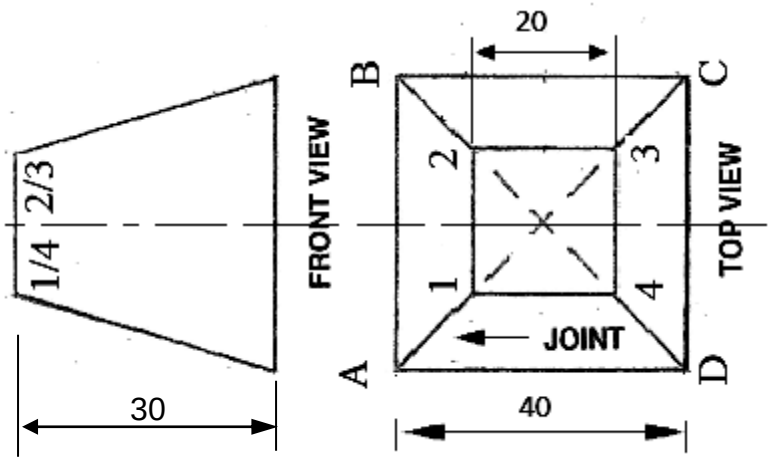

FIGURE 3

4.1 Draw the given views on the attached ANSWER SHEET. (4)

4.2 Use the triangulation method and draw the development of the pattern of the hood.

Write your EXAMINATION NUMBER on the ANSWER SHEET and put it in the ANSWER BOOK. (11)
[15]

QUESTION 5

FIGURE 4 shows a roof truss with dimensions.

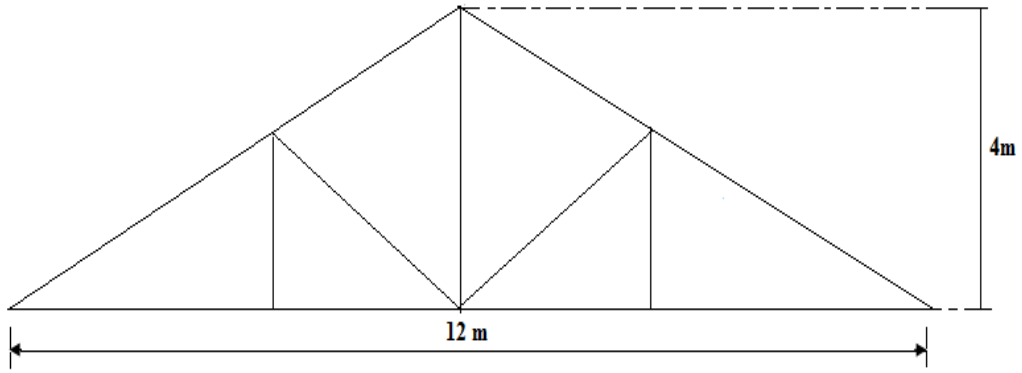

FIGURE 4

Calculate the pitch of the roof truss using the given dimensions. **[5]**

QUESTION 6

6.1 Name THREE types of cast iron. (3)

6.2 List FIVE disadvantages of metal arc welding of cast iron. (5)

6.3 Give TWO reasons for preheating metals before welding can take place. (2)

6.4 Explain the back-step welding process with the aid of a neat, labelled drawing. (5)
[15]

Copyright reserved

QUESTION 7

7.1 FIGURE 5 shows the THREE different types of flames used for oxyacetylene welding.

Identify the flames by writing the answer next to the letter (A–C) in the ANSWER BOOK.

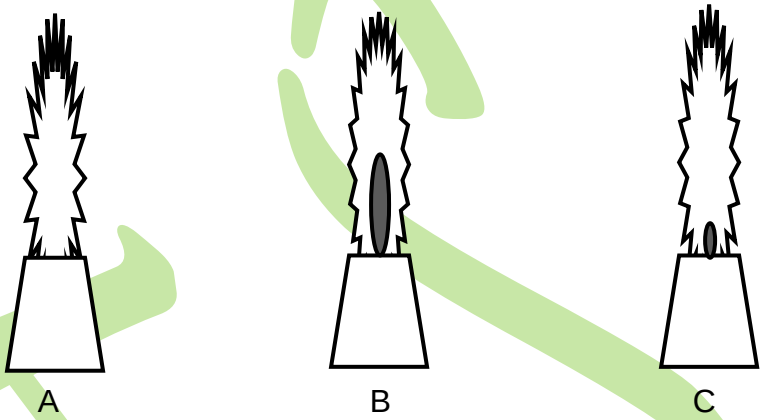

FIGURE 5 (3)

7.2 List SIX safety precautions to be considered when handling or using oxyacetylene gas cylinders for gas welding or cutting. (6)

7.3 List THREE methods of removing impurities from the surface of metal plates. (3)
[12]

QUESTION 8

8.1 List FIVE components that make up the tungsten inert gas (TIG) system. (5)

8.2 State TWO causes of porosity. (2)

8.3 Draw a neat, labelled sketch showing the shielded metal arc welding (SMAW) process. Include each of the following components in the sketch:
Electrode wire, electrode, shielding gas, slag, solidified metal and molten metal. (8)
[15]

Copyright reserved

QUESTION 9

List any FIVE destructive or non-destructive welding testing methods. **[5]**

QUESTION 10

10.1 Define the term *case hardening of steel*. (5)

10.2 Give THREE reasons for annealing steel. (3)
[8]

TOTAL: 100

Copyright reserved

WELDERS' THEORY N2

ANSWER SHEET **EXAMINATION NUMBER**

QUESTION 4

Copyright reserved