higher education & training

Department:
Higher Education and Training
REPUBLIC OF SOUTH AFRICA

MARKING GUIDELINE

NATIONAL CERTIFICATE

WELDERS' THEORY N2

6 APRIL 2018

This marking guideline consists of 7 pages.

Copyright reserved

QUESTION 1

1.1 A – Main frame
B – Guard
C – Shearing blades
D – Cropper for cropping angle iron
E – Adjustable hold-downs
F – Punch and stripper (6)

1.2
- Ensure that the work pieces are clamped securely.
- Use the correct speeds and feeds.
- Use the necessary safety equipment (overalls, safety glasses, safety boots).
- Ensure that the machine has ample cutting fluid.
- Ensure that the drill bit is sharpened properly. (Any 4 × 1) (4)

[10]

QUESTION 2

2.1
- Can be used when mass production is required
- Can be used by semi-skilled workers
- Quicker to use
- Ensures accuracy (Any relevant 4 × 1) (4)

2.2 A roof truss is the structural framework✓ that rests on the external walls✓ of a building and supports the roof of a building.✓
(Any relevant 1 × 3) (3)

[7]

QUESTION 3

3.1

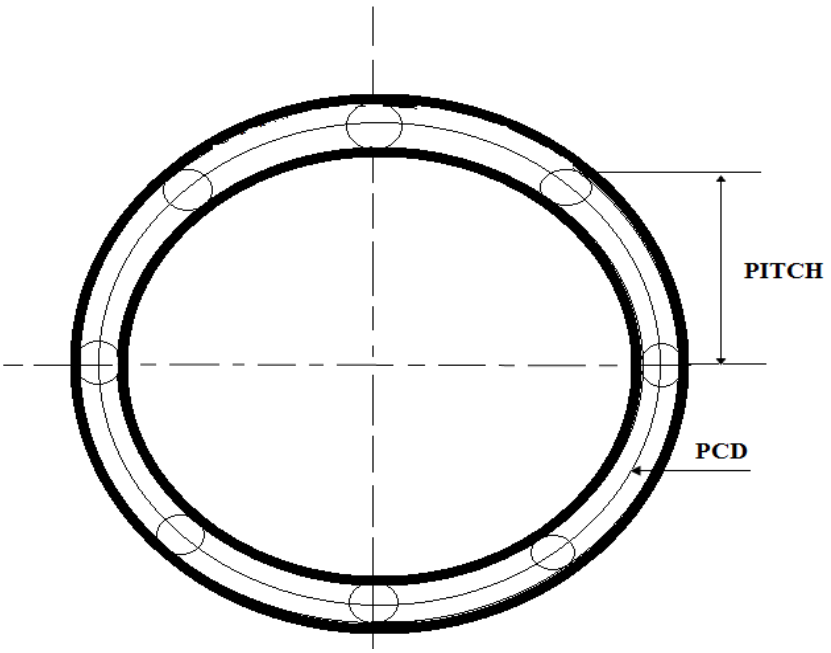

(2 marks for accuracy and neatness) (5)

3.2 A - Outside diameter
B - Inside diameter
C - Wall thickness (3)

[8]

QUESTION 4

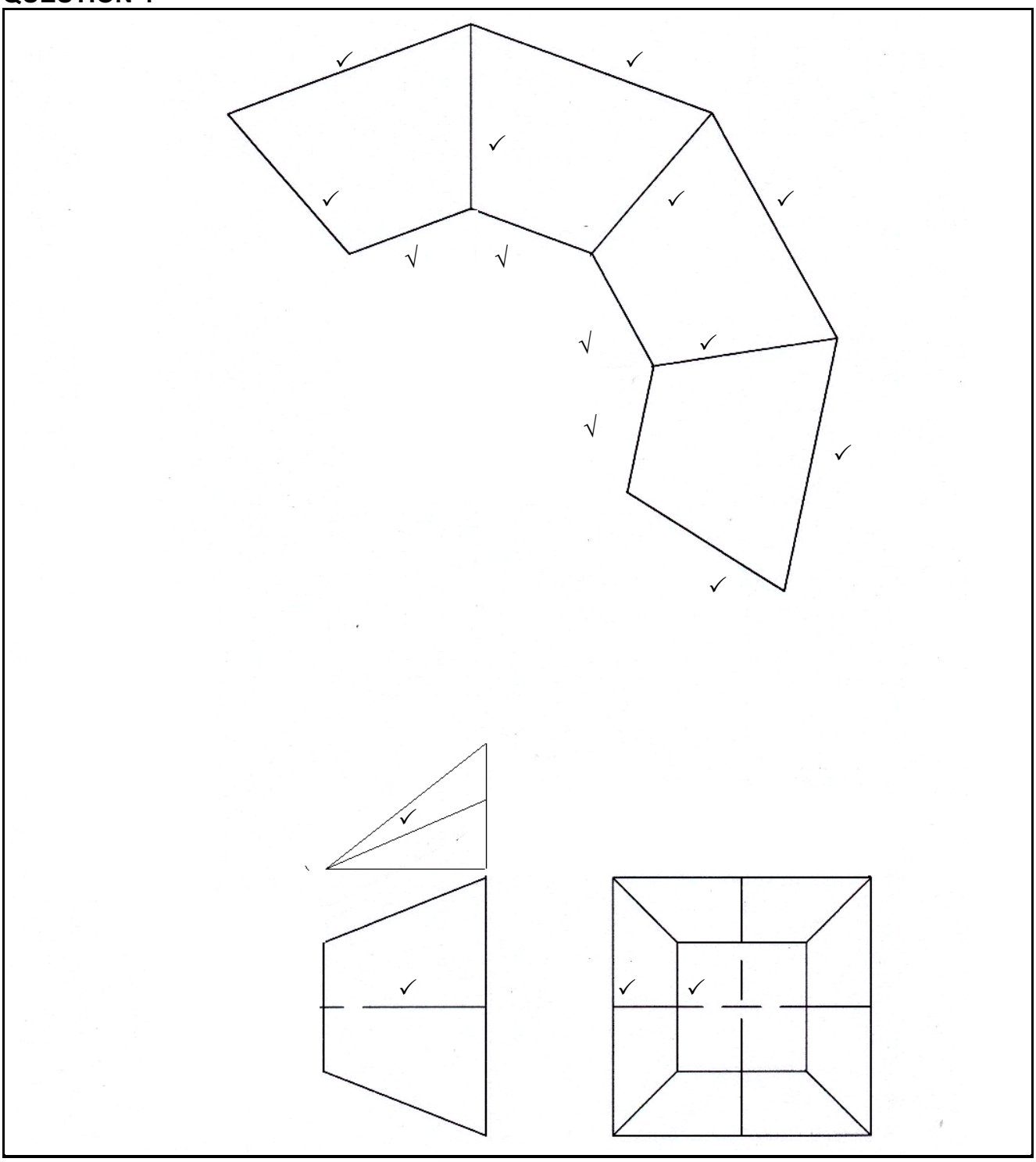

SQUARE-TO-SQUARE HOOD
SCALE 1 : 1

[15]

QUESTION 5

Pitch = Rise/Span

= 4/12

= 1/3

The pitch of the truss is 1/3 pitch. **[5]**

QUESTION 6

6.1
- White cast iron
- Grey cast iron
- Malleable cast iron (3)

6.2
- Metallic arc welding can cause hard spots due to cooling.
- If not preheated, martensite is formed at the weld boundaries.
- High-nickel electrodes are expensive.
- If high preheating is used the advantage of over-bronze welding is lost.
- Preheating must take place. (Any relevant 5 × 1) (5)

6.3
- Stresses and strains in the steel are released.
- Moisture is removed. (Any relevant 2 × 1) (2)

6.4

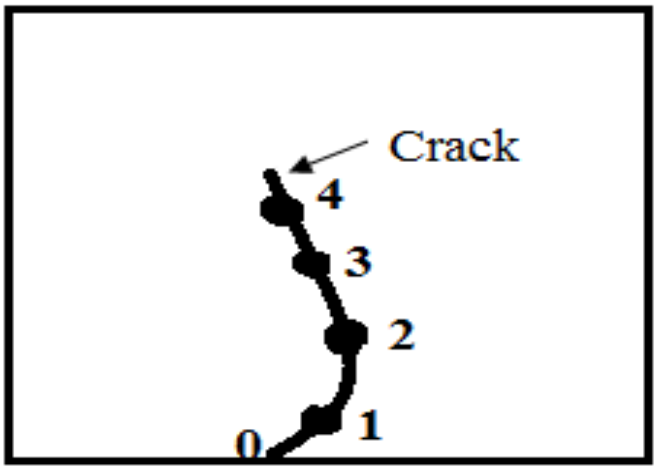

Divide the crack into sections of about 40 mm in length.
Start welding from 1 to 0 then 2 to 1 and 3 to 2 until the welding is finished. (5)
[15]

QUESTION 7

7.1 A - Carburising flame
B - Oxidising flame
C - Neutral flame (3)

7.2
- Store acetylene and oxygen cylinders apart.
- Chain cylinders when transporting them.
- Stacks of cylinders should be carefully wedged to prevent the cylinders from rolling.
- Cylinders should never be stacked more than four deep.
- Cylinders must be kept cool and must be protected from sunlight, rain, frost, heat and corrosive conditions.
- Never handle cylinders roughly.
- When acetylene cylinders are being used the key valve must be kept on the cylinder so that the valve can be closed in an emergency.

(Any relevant 6 × 1) (6)

7.3
- Use mechanical methods such as scrapers.
- Use chemicals or solvents to wash away contaminates, for example oil and grease.
- Use the flame of a cutting torch to burn away contaminates, for example scale. (Any relevant 3 × 1) (3)

[12]

QUESTION 8

8.1
- Power source
- Wire feed unit
- Gas feed unit
- Gas flowmeter
- Control system
- Welding gun (Any 5 × 1) (5)

8.2
- Incorrect welding technique
- Incorrect welding speed
- Incorrect filler rod
- Contamination (Any 2 × 1) (2)

8.3

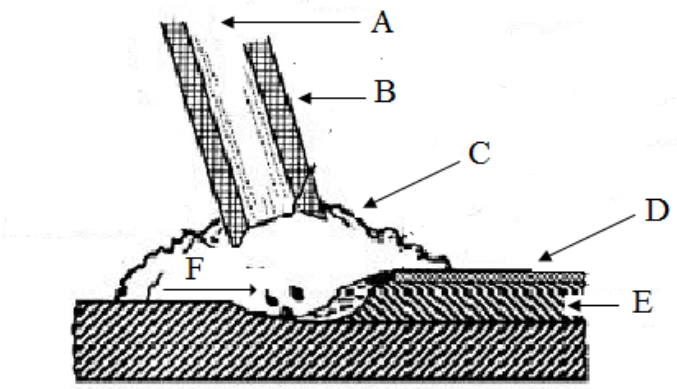

A - Electrode wire
B - Electrode
C - Shielding gas
D - Slag
E - Solidified metal
F - Molten metal

(2 marks for neatness and accuracy) (8)
[15]

QUESTION 9

- Tensile test
- Nick-bend test
- Guided bend test
- Free-bend test
- Impact test
- Visual inspection
- Radiographic test
- Magnetic particle test
- Liquid-penetrate test
- Ultrasonic test

(Any 5 × 1) **[5]**

QUESTION 10

10.1 It is used to produce a hard surface✓ skin on the steel. The outer skin will have a good wearing surface.✓ The strong✓ and tough inner core✓ can resist shock loads.✓ (5)

10.2
- Softens the steel
- Relieves internal stresses
- Refines the grain structure of the steel
- Reduces brittleness

(Any 3 × 1) (3)
[8]

TOTAL: 100

Copyright reserved