higher education & training

Department:
Higher Education and Training
REPUBLIC OF SOUTH AFRICA

MARKING GUIDELINE

NATIONAL CERTIFICATE

APRIL EXAMINATION

WELDERS' THEORY N2

17 APRIL 2015

This marking guideline consists of 9 pages.

Copyright reserved

QUESTION 1: MACHINES

1.1 Working principles – Radial Power Saw. This machine consists of a circular blade that is mounted on slides. The circular blade circulates at a selected speed to cut the steel profile that is clamped in position. It is used to cut pipes and various profiles, RSJ, RSC, UB, etc. (4)

1.2 Safety Precautions

1.2.1 Nibbling machine

- Gloves should be worn
- Do not attempt to cut hard metal
- Switch off at the power source before changing tools and making adjustments
- Do not apply force to the workpiece when cutting to speed up the job
- Feed the workpiece gradually to avoid damage

Any THREE (3)

1.2.2 Bending machine

- Do not overload machine
- Do not use dies that are unbalanced or warped
- All guards must be in position
- Position of emergency stop button must be noticed
- Work near centre of machine
- Ensure that the bed and ram are parallel

Any THREE (3)
[10]

QUESTION 2: JOINING OF ROLLED STEEL SECTIONS

2.1 Angle – iron cleats are tack welded to the cylinder and a bolt and nut passed through the holes. Tighten the bolt and nut until the cylinders are pulled to the correct gap for welding. Tack weld the cylinder; remove the bolt and nut and cleats before welding.

Cylinder with open ends

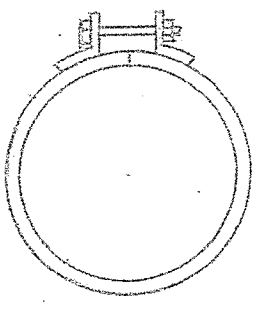

(3)

Copyright reserved

2.2 Assembly aids are devices usually made from scrap material that aid (help) to move parts into the correct position for tacking and welding. (2)

Jigs are devices into which the parts are clamped together in their correct position. The parts are tacked or welded while they are held by the jig. (2)
[7]

QUESTION 3: GENERAL PIPE WORK

3.1 When two holes are aligned horizontally on a circular pipe flange using a level.

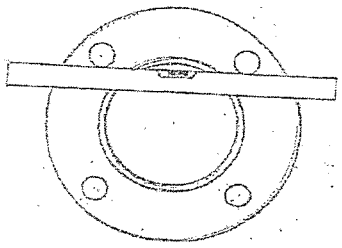

(4)

3.2 Length of 45° bend = $\frac{45° \times 2\pi \times R}{360°}$

$= \frac{45° \times 6.283 \times 330}{360°}$

$= 259.1$ mm (4)
[8]

Copyright reserved

QUESTION 4: DEVELOPMENT

See diagram sheet 2 (attached)

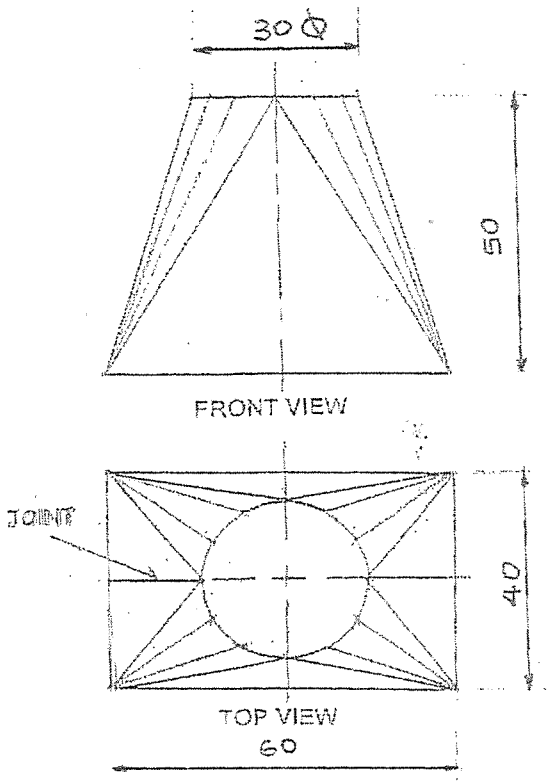

[15]

QUESTION 5: STEEL STRUCTURES

Length of rafter $= \sqrt{20^2 + 4^2}$
$= \sqrt{400 + 16}$
$= \sqrt{416}$
$= 20.396$ m

$\therefore$ The length of the rafter = 20.396 m **[5]**

Copyright reserved

QUESTION 6: METALS

6.1 Uses of high carbon steel

- Tool bits
- Dies
- Saws
- Chisel
- Cutlery
- Files

Any THREE (3)

6.2 Must be done slowly and evenly because an abrupt motion will cause a porous weld. (3)

6.3 Effects when steel alloyed with:

6.3.1 Chrome

- increases resistance to wear and corrosion
- increases magnetic properties
- increases resistance to shock and heat

Any TWO (2)

6.3.2 Silicon

When added improves the strength and ability of steel to harden. (2)

6.3.3 Manganese

Improves hardness and strength and provides a non-shrinking steel. (2)

6.4 To prevent the weld from becoming brittle. (2)

6.5 Engine blocks
Ornaments (2)
[15]

Copyright reserved

QUESTION 7: GAS WELDING AND CUTTING

7.1 Calcium carbide and water. (4)

7.2 Harmful effects

7.2.1 *Laminated plates*

Stops the cut and the welded plate splits along the lamination – weakens the structure. (2)

7.2.2 *Flakes(scales)*

Heavy scale renders starting difficulties and may prevent cutting altogether. Oxide layers flake off and cannot be welded or cut. (2)

7.3

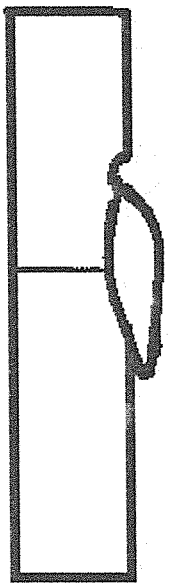

Metal undercut is worsened by gravity

Weld metal is overlapping the side of the joint without fusing due to gravity

Undercut and overlap

(4)
[12]

QUESTION 8: ARC WELDING

8.1 *Reverse polarity*

Workpiece is connected to the negative side of the power supply and the electrode to the positive side. (2)

8.2 Methods to strike an arc:

- Tapping method
- Scratching method (2)

Copyright reserved

8.3 Weld Symbols

8.3.1 Single J-butt joint to be welded on the arrow side.

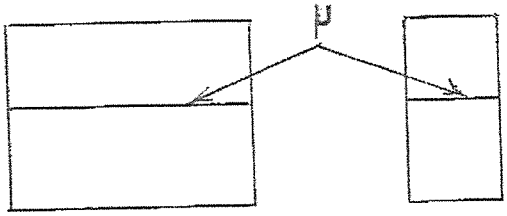

(2)

8.3.2 Single V-butt joint to be welded on the other side.

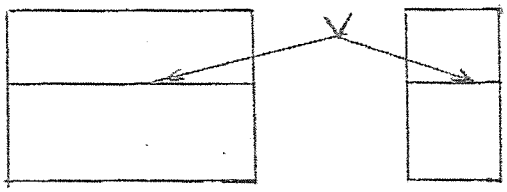

(2)

8.4 TIG Welding Machine

A – Torch
B – Cooling water supply
C – Filler rod
D – Workpiece
E – Foot pedal
F – Gas supply
G – Power source

Any THREE (4)

8.5 Gas feed unit

The process of feeding a bare filler wire in conjunction with an inert shield gas through a torch unit (welding gun). The welding wire picks up welding current in the welding gun and functions as a continuous electrode. The gas flow from the gun to the workpiece is controlled by the trigger on the welding gun. It is designed to release gas just before the electrode, so that when the arc begins there is already shielding gas. (3)

[15]

Copyright reserved

QUESTION 9: WELD TESTING

9.1 Guided bend test

The butt weld is ground flush. The workpiece is placed on the centre of the U-shaped female die. The jack is pumped and the U-shaped male die pushes the workpiece into the female die. The workpiece is bent to the U-shape with the weld in the centre of the bend. The bend is inspected for cracks or breakages. (3)

9.2 Destructive test (2)
[5]

QUESTION 10: HEAT TREATMENT OF STEEL

10.1 Critical temperature

When metal is heated to the lower critical temperature (+-720 °C) the ferrite and pearlite begin to merge. If we continue to the upper critical temperature (+-900 °C), this merging continues until the metal structure is only austenite. (4)

10.2 Pearlite structure

Consists of layers of ferrite and cementite, is the carbon found in steel. Pearlite contains 0.83% carbon and is formed when the steel drops below 695 °C during the cooling process from molten iron. The pearlite is made up of 87% ferrite and 13% cementite. (4)
[8]

TOTAL: 100

Copyright reserved

DIAGRAM SHEET 1

QUESTION 4: DEVELOPMENT

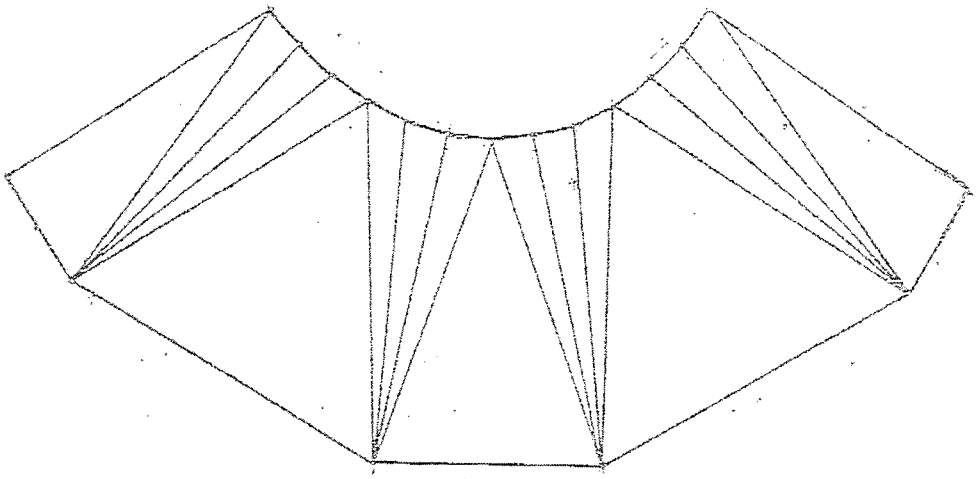

FIGURE 3: RECTANGULAR- TO - R

Copyright reserved