201304T334

higher education & training

Department:
Higher Education and Training
REPUBLIC OF SOUTH AFRICA

T1700(E)(A9)T
APRIL EXAMINATION

NATIONAL CERTIFICATE

WELDERS' THEORY N2

(11022082)

9 April 2013 (X-Paper)
09:00–12:00

Candidates will require drawing instruments.

Nonprogrammable calculators may be used.

This question paper consists of 5 pages and a 2-page diagram sheet.

Copyright reserved

DEPARTMENT OF HIGHER EDUCATION AND TRAINING
REPUBLIC OF SOUTH AFRICA

NATIONAL CERTIFICATE
WELDERS' THEORY N2
TIME: 3 HOURS
MARKS: 100

INSTRUCTIONS AND INFORMATION

1. Answer ALL the questions.
2. Read ALL the questions carefully.
3. Number the answers according to the numbering system used in this question paper.
4. Freehand drawings must be done in pencil and must be neat and reasonably large.
5. ALL work you do not want to be marked must be clearly crossed out.
6. Write neatly and legibly.

Copyright reserved

QUESTION 1: MACHINES

1.1 State THREE safety precautions to be observed when working with a portable angle-grinding machine. (3)

1.2 FIGURE 1, DIAGRAM SHEET 1 (attached) shows a bending roll machine. Label the FOUR parts (A–D) and write the word next to the corresponding letter in the ANSWER BOOK. (4)

1.3 Briefly explain the working principle of the guillotine. (3)
[10]

QUESTION 2: JOINING OF ROLLED STEEL SECTIONS

2.1 Define the term *jig*. (2)

2.2 Briefly explain, with the aid of a freehand drawing, how to solve the assembly problem to pull the vertical plate down as shown in FIGURE 2, DIAGRAM SHEET 1 (attached). (3)

2.3 Explain the meaning of the term *notching*. (2)
[7]

QUESTION 3: GENERAL PIPE WORK

3.1 Indicate, by means of a freehand drawing, the pitch-circle diameter (PCD) and the pitch of a pipe flange. (4)

3.2 Calculate the length of a 45° bend where centre-to-face (C–F) distance is 230 mm. (4)
[8]

QUESTION 4: DEVELOPMENT

FIGURE 3, DIAGRAM SHEET 2 (attached) shows a square-to-square hood. Use the radial line method and draw the development of the pattern of the hood on the DIAGRAM SHEET. Write your EXAMINATION NUMBER on the DIAGRAM SHEET and place it in the ANSWER BOOK. **[15]**

QUESTION 5: STEEL STRUCTURES

Calculate the length of a roof truss rafter, with a run of 9 m and a rise of 3 m. **[5]**

Copyright reserved

QUESTION 6: METALS

6.1 State TWO uses of grey cast iron. (2)

6.2 What is the size of the V-angle when preparing grey cast iron for electric arc welding? (2)

6.3 Name FOUR main components of stainless steel. (4)

6.4 Explain the effects on steel when alloyed with each of the following elements:

6.4.1 Carbon (3)

6.4.2 Manganese (2)

6.4.3 Vanadium (2)

[15]

QUESTION 7: GAS WELDING

7.1 Draw freehand the THREE types of flame used for oxy-acetylene welding. (3)

7.2 Explain the difference between a *high pressure* and a *low pressure* system in oxy-acetylene welding. (4)

7.3 With what type of material and liquid is an acetylene cylinder filled? (2)

7.4 State THREE safety precautions to be observed during oxy-acetylene welding. (3)

[12]

QUESTION 8: ARC WELDING

8.1 Briefly describe and illustrate, by means of a freehand drawing, each of the following welding terms:

8.1.1 Arc length (2)

8.1.2 Gap (2)

8.2 Why are foot controls fitted to some tungsten inert gas (TIG) welding machines? (2)

8.3 Name FIVE components of the metal inert gas (MIG) welding system. (5)

8.4 What is meant by the term *straight polarity* in direct-current welding? (2)

8.5 Briefly explain the operation of the gas feed unit in metal inert gas (MIG) welding. (2)

[15]

Copyright reserved

QUESTION 9: WELD TESTING

9.1 State THREE weld defects that X-ray testing can detect. (3)

9.2 In which TWO forms can iron particles be applied to welds during magnetic testing? (2)
[5]

QUESTION 10: HEAT TREATMENT

10.1 Briefly describe the pearlite structure of steel. (4)

10.2 State TWO precautions to be observed when hardening steel. (2)

10.3 What is meant by the term *post heating*? (2)
[8]

TOTAL: 100

Copyright reserved

DIAGRAM SHEET 1 **EXAMINATION NUMBER:**

QUESTION 1.2

BENDING ROLL MACHINE

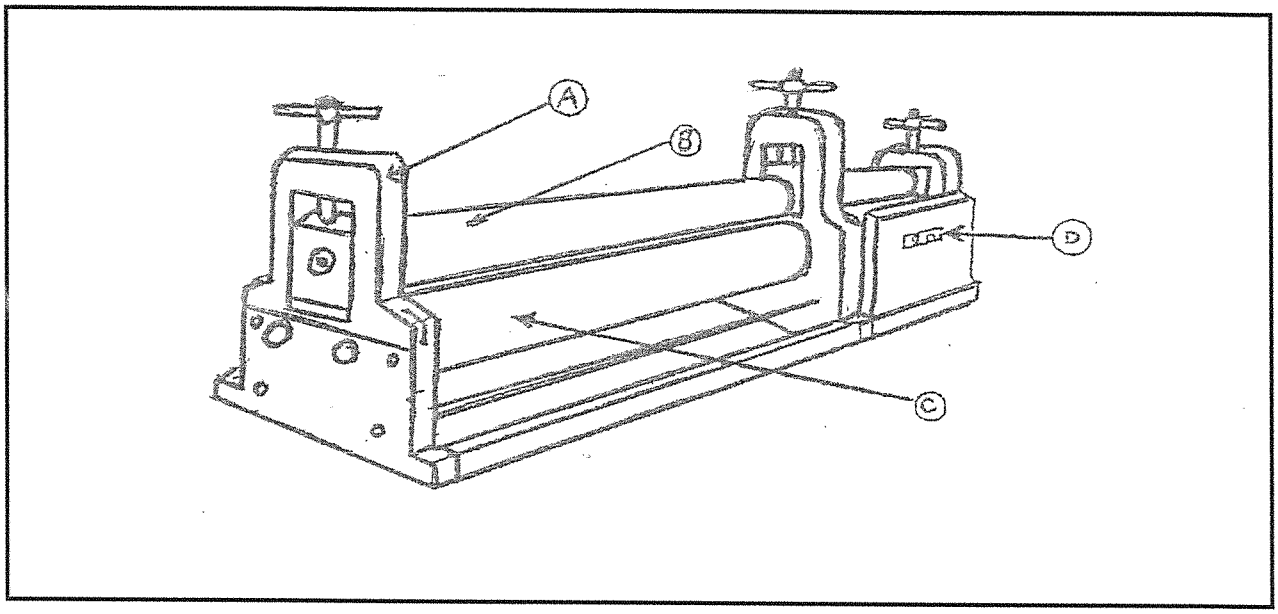

FIGURE 1

QUESTION 2.2

PULL VERTICAL PLATE DOWN

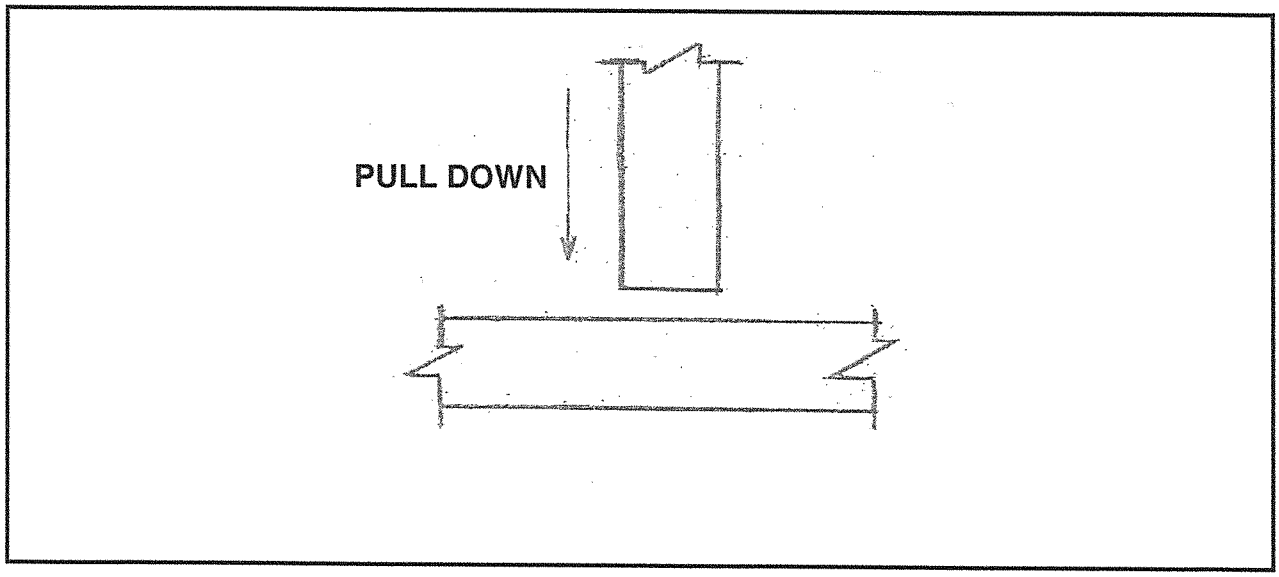

FIGURE 2

Copyright reserved

DIAGRAM SHEET 2 **EXAMINATION NUMBER:**

QUESTION 4

RADIAL LINE METHOD – SQUARE-TO-SQUARE HOOD

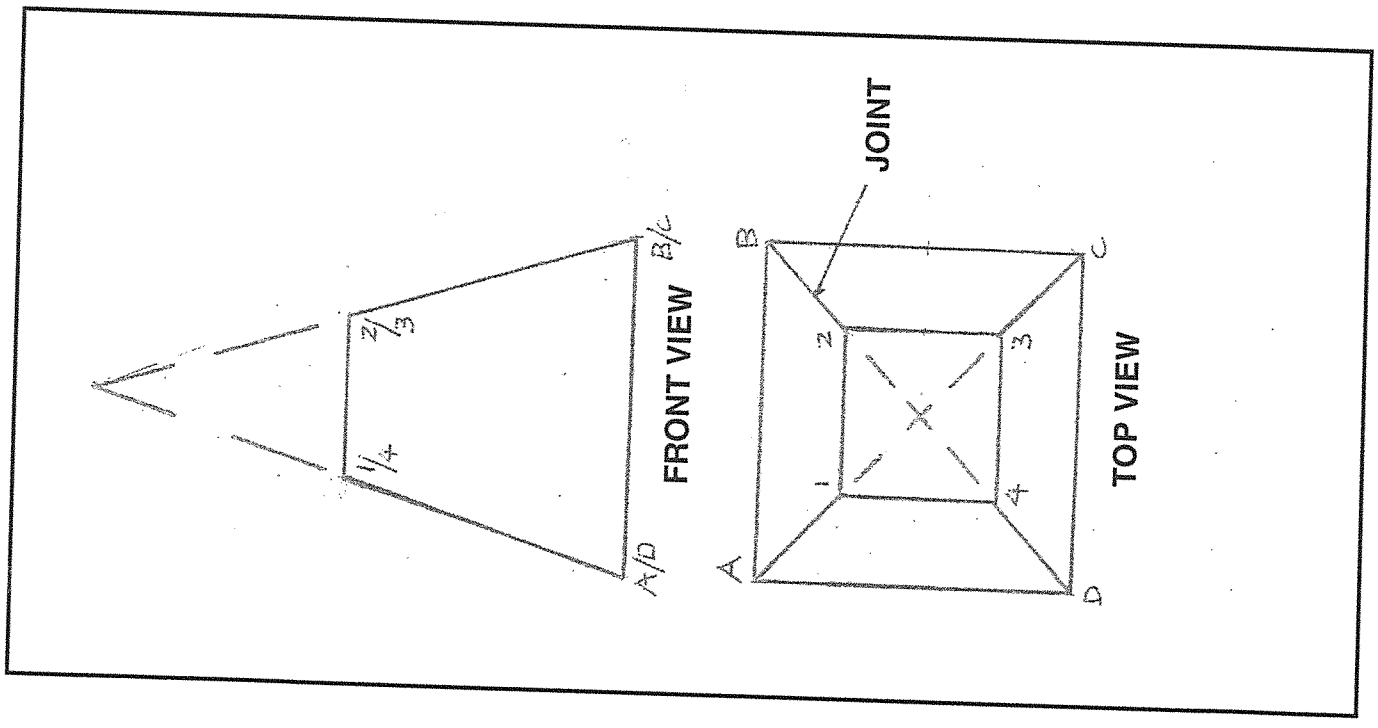

FIGURE 3

[15]

Copyright reserved