higher education & training

Department:
Higher Education and Training
REPUBLIC OF SOUTH AFRICA

NATIONAL CERTIFICATE

TOOLMAKERS' THEORY N2

(11020202)

11 August 2021 (X-paper)
09:00–12:00

Drawing instruments and nonprogrammable calculators may be used.

This question paper consists of 7 pages and 2 addenda.

274Q1G2111

Copyright reserved

DEPARTMENT OF HIGHER EDUCATION AND TRAINING
REPUBLIC OF SOUTH AFRICA

NATIONAL CERTIFICATE
TOOLMAKERS' THEORY N2
TIME: 3 HOURS
MARKS: 100

INSTRUCTIONS AND INFORMATION

1. Answer all the questions.
2. Read all the questions carefully.
3. Number the answers according to the numbering system used in this question paper.
4. Sketches must be large, neat and fully labelled.
5. Write neatly and legibly.

Copyright reserved

QUESTION 1: OCCUPATIONAL SAFETY

1.1 Name FIVE safety precautions as applicable when using hand tools. (5)

1.2 Identify THREE unsafe conditions in the FIGURE 1 below.

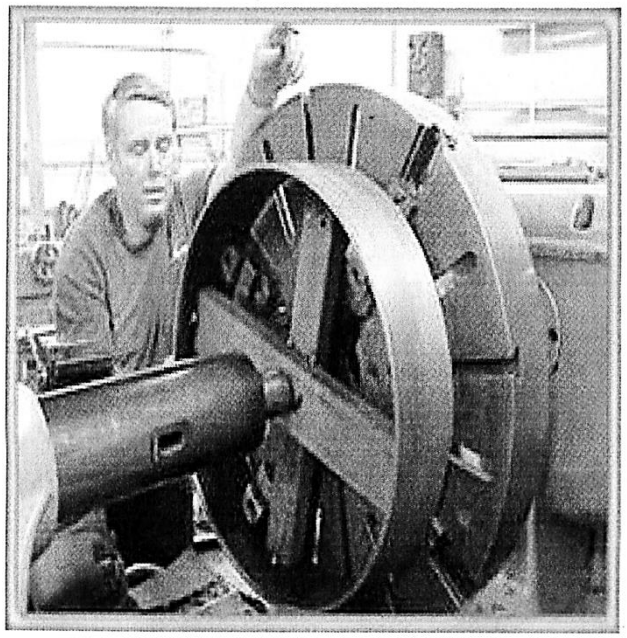

FIGURE 1 (3)

1.3 Name THREE responsibilities of the person in charge in a machine shop or tool room. (3)

[11]

QUESTION 2: STEELS AND TOOL STEELS

2.1 Name the main properties of steel when the following elements are added to it:

2.1.1 Carbon

2.1.2 Nickel

(2 × 1) (2)

2.2 Name SIX alloying elements that are added to steel. (6)

2.3 Explain the term *tool steel*. (2)

[10]

Copyright reserved

QUESTION 3: HEAT TREATMENT AND HARDNESS TESTING

3.1 Name TWO types of furnaces used for heat treatment. (2)

3.2 Describe TWO of the disadvantages of the use of crude-oil furnaces for heat treatment. (2)

3.3 Identify and name all the parts (1–7) of the Rockwell testing machine shown FIGURE 2 below.

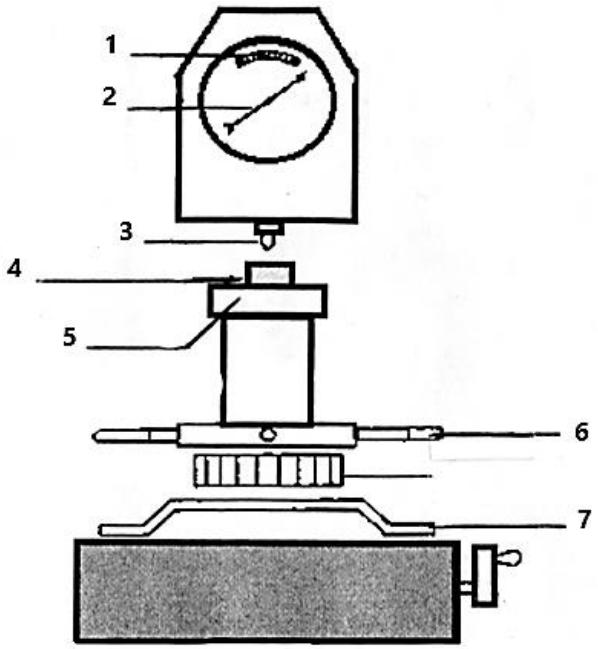

FIGURE 2

(7)
[11]

QUESTION 4: LIMITS AND FITS

4.1 Name THREE types of fits used in a tool room or machine shop. (3)

4.2 You have to manufacture a shaft and a bush on a lathe.

The sizes are as follows:

Bush = $\varphi 34 \begin{matrix} +0,03 \\ -0,00 \end{matrix}$ Shaft = $\varphi 34 \begin{matrix} +0,00 \\ -0,02 \end{matrix}$

Calculate the maximum and minimum tolerances between the bush and the shaft. (6)

4.3 A loose running on a bearing is given as 45H9-d10.

Explain the meaning of the *H9* and the *d10*. (2)
[11]

Copyright reserved

QUESTION 5: PRECISION MEASURING

5.1 Calculate the distance 'h' in the following drawing in FIGURE 3

The angle is 23°36'.

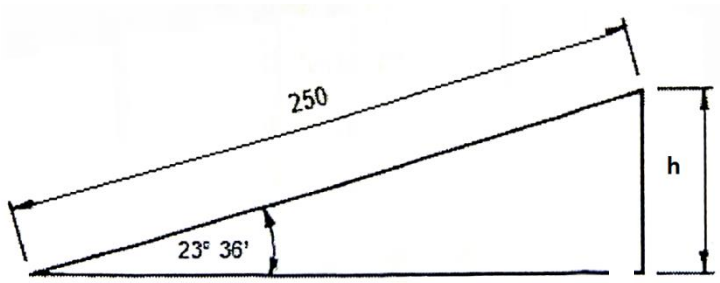

FIGURE 3 (4)

5.2 Determine the minimum gauge blocks required to build the distance in QUESTION 5.1.

Make use of an M45 set of gauge blocks. (5)

5.3 Explain the reason for making use of wear blocks in a set of slip gauges. (1)
[10]

QUESTION 6: GAUGES

6.1 How would you classify the THREE main groups of gauges? (3)

6.2 Make a neat drawing of a taper plug gauge. (1)

6.3 Explain the reason for the flat on a standard plug gauge. (1)

6.4 For what would you use standard plug gauges? (1)

6.5 Name FOUR advantages of using a gauge. (4)
[10]

Copyright reserved

QUESTION 7: JIGS AND FIXTURES

7.1 Name the different parts (1–5) of the following flat surface locator in FIGURE 4:

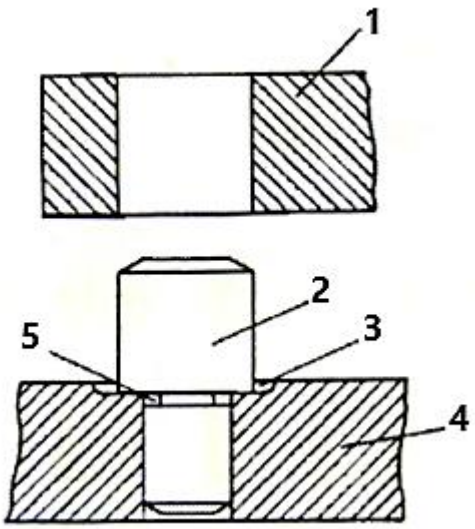

FIGURE 4 (5)

7.2 Make a neat and clear drawing of a drill screwed bush. (1)

7.3 Describe the difference between a *jig* and a *fixture*. (2)

7.4 Explain with aid of a sketch how you would locate a round workpiece or shaft for marking off. (2)
[10]

QUESTION 8: CEMENTED CARBIDE TIP AND CUTTING TOOLS

8.1 Make a neat and clear drawing of the following rake angles of a cutting tool:

8.1.1 Positive rake

8.1.2 Zero or neutral rake

8.1.3 Negative rake

(3 × 1) (3)

8.2 Name FIVE uses of single-point cutting tools. (5)

8.3 In which direction does a left-hand cutting tool cut? (1)

8.4 In which direction does a right-hand cutting tool cut? (1)
[10]

Copyright reserved

QUESTION 9: DRILLS AND REAMERS

9.1	Make a neat and clear drawing to show the lip length and height of a drill bit.	(2)
9.2	Why do highspeed steel (HSS) drills have flutes in their body?	(2)
9.3	Name FIVE types of reamers used in the engineering industry.	(5)
9.4	What type of tool is used to remove a drill bit from a Morse taper sleeve?	(1)
		[10]

QUESTION 10: DIE SINKING AND FORGING

10.1	Name FOUR aspects to be considered when manufacturing dies.	(4)
10.2	Name THREE methods that can be used in forging to stamp and manufacture components.	(3)
		[7]

TOTAL: 100

Copyright reserved

Copyright reserved

6. Table of primary fits (hole basis system) / *Tabel van primêre passings (gatbasisstelsel)*

Nominal sizes *Nominale groottes*		CLEARANCE FITS VRYPASSINGS												TRANSITION FITS OORGANGSPASSINGS				INTERFERANCE FITS STUITPASSINGS			
		Tolerance *Toleransie*		Tolerance *Toleransie*		Tolerance *Toleransie*		Tolerance *Toleransie*		Tolerance *Toleransie*		Tolerance *Toleransie*		Tolerance *Toleransie*		Tolerance *Toleransie*		Tolerance *Toleransie*		Tolerance *Toleransie*	
Over *Oor* mm	To *Tot* mm	H11	c11	H9	d10	H9	e9	H8	f7	H7	g6	H7	h6	H7	k6	H7	n6	H7	p6	H7	s6
		UNIT / *EENHEID* 0,001 mm																			
10	18	+ 110	- 95	+ 43	- 50	+ 43	- 32	+ 27	- 16	+ 18	- 6	+ 18	- 11	+18	+ 12	+18	+ 23	+ 18	+ 29	+ 18	+ 39
		0	- 205	0	- 120	0	- 75	0	- 34	0	- 17	0	0	0	+ 1	0	+ 12	0	+ 18	0	+ 28
18	30	+ 130	- 110	+ 52	- 65	+ 52	- 40	+ 33	- 20	+ 21	- 7	+ 21	- 13	+ 21	+ 15	+ 21	+ 28	+ 21	+ 35	+ 21	+ 48
		0	- 204	0	- 149	0	- 92	0	- 41	0	- 20	0	0	0	+ 2	0	+ 15	0	+ 22	0	+ 35
30	40	+ 160	- 120																		
		0	- 280	+ 62	- 80	+ 62	- 50	+ 39	- 25	+ 25	- 9	+ 25	- 16	+ 25	+ 18	+ 25	+ 33	+ 25	+ 42	+ 25	+ 59
40	50	+ 160	- 130	0	- 180	0	- 112	0	- 50	0	- 25	0	0	0	+ 2	0	+ 17	0	+ 26	0	+ 43
		0	- 290																		

ADDENDUM 2

GAUGE BLOCK SETS

Set No. M105

Range or size (mm)	Increment in mm	No. of pieces
1,01 – 1,49	0,01	49
0,50 – 24,50	0,50	49
25 – 100	25	4
1,0025 – 1,0075	0,0025	3
	Total	105

Set No. M88

Range or size (mm)	Increment in mm	No. of pieces
1,001 – 1,009	0,001	9
1,01 – 1,49	0,01	49
0,5 – 9,5	0,5	19
10 – 100	10	10
1,0005	-	1
	Total	88

Set No. M78

Range or size (mm)	Increment in mm	No. of pieces
1,01 – 1,49	0,01	49
0,50 – 9,50	0,5	19
10, 20, 30, 40, 50, 75, 100	-	7
1,0025 – 1,0075	0,0025	3
	Total	78

Set No. M50

Range or size (mm)	Increment in mm	No. of pieces
1,0025 – 1,0075	0,0025	3
1,01 – 1,09	0,01	9
1,1 – 1,9	0,1	9
1 – 25	1	25
50 – 100	25	3
0,50	-	1
	Total	50

Set No. M45

Range or size (mm)	Increment in mm	No. of pieces
1,001 – 1,009	0,001	9
1,01 – 1,09	0,01	9
1,1 – 1,9	0,1	9
1 – 9	1	9
10 – 90	10	9
	Total	45

Copyright reserved