higher education & training

Department:
Higher Education and Training
REPUBLIC OF SOUTH AFRICA

T1730(**E**)(A1)T

NATIONAL CERTIFICATE

TOOLMAKERS' THEORY N2

(11020202)

1 August 2018 (X-Paper)
09:00–12:00

Nonprogrammable calculators may be used.

This question paper consists of 6 pages and 2 addendums.

Copyright reserved

DEPARTMENT OF HIGHER EDUCATION AND TRAINING
REPUBLIC OF SOUTH AFRICA

NATIONAL CERTIFICATE
TOOLMAKERS' THEORY N2
TIME: 3 HOURS
MARKS: 100

INSTRUCTIONS AND INFORMATION

1. Answer ALL the questions.
2. Read ALL the questions carefully.
3. Number the answers according to the numbering system used in this question paper.
4. Use a BLACK or BLUE pen.
5. Start each section on a NEW page.
6. Keep subsections of questions together.
7. Rule off after completion of each question.
8. Leave at least THREE lines after each question.
9. Use drawing instruments for ALL drawings/diagrams.
10. Label ALL drawings/diagrams fully.
11. Write neatly and legibly.

Copyright reserved

QUESTION 1: OCCUPATIONAL SAFETY

1.1 Name TWO rules that should be observed when working with an electric hand drill. (2)

1.2 Identify the different components of the electric hand drill in Figure 1 below. Write only the answer next to the letter (A–F) in the ANSWER BOOK. (6)

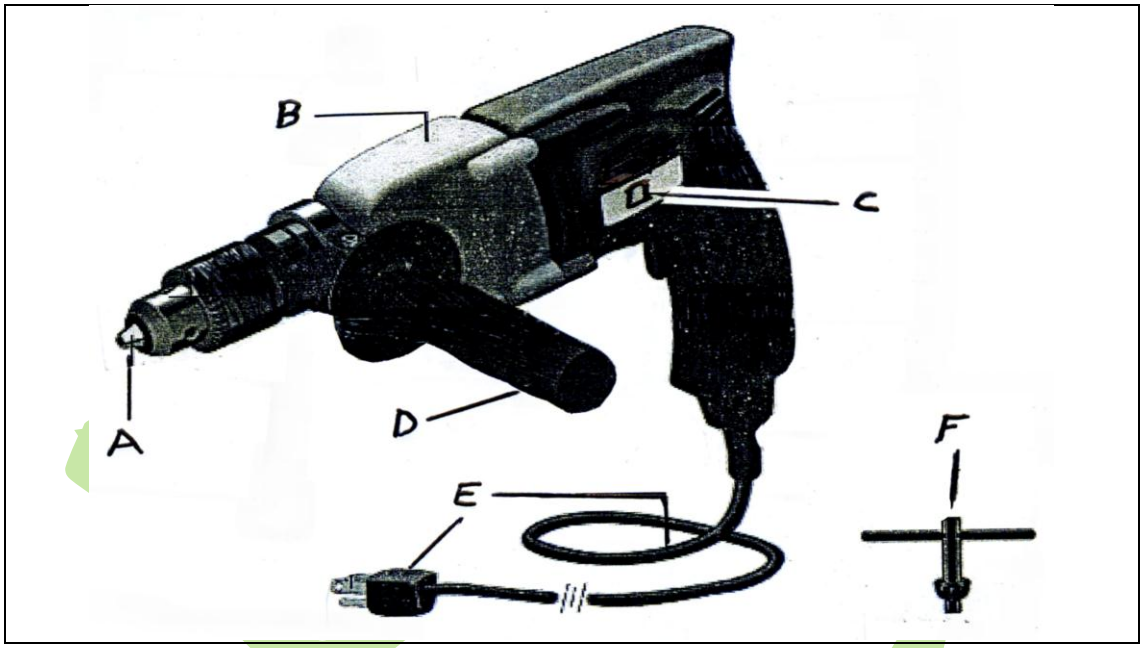

FIGURE 1

1.3 Describe the THREE types of wires and their colours in a three-point plug. (3)

[11]

QUESTION 2: STEEL AND TOOL STEEL

2.1 Indicate whether the following statements are TRUE or FALSE. Choose the answer and write only 'True' or 'False' next to the question number (2.1.1–2.1.5) in the ANSWER BOOK.

2.1.1 Silver steel is a common tool steel that is supplied as a centreless ground round bar.

2.1.2 Tensile steel is often called nickel-chrome steel.

2.1.3 Nickel-chrome steel has a low tensile strength and a greater resistance to shock and fatigue.

2.1.4 Spring steel has a low elasticity and high tensile strength.

2.1.5 With case hardening, mild steel obtains a very hard outer layer (± 61 Rockwell).

(5 × 1) (5)

Copyright reserved

2.2 Name the typical composition of silver steel and the percentage of each part. (5)

2.3 Define the term *non-deforming steel*. (2)
[12]

QUESTION 3: HEAT TREATMENT AND HARDNESS TESTING

3.1 Explain the term *quenching* in your own words. (1)

3.2 Name the most important alloying element of steel. (1)

3.3 How would you evaluate the different features in steel? (2)

3.4 Based on what you know, how would you explain the presence of the elements chromium, nickel and manganese in steel? (2)

3.5 What is the function of fire-resistant bricks and furnace bricks? (2)

3.6 Name THREE advantages of the Rockwell test machine. (3)
[11]

QUESTION 4: LIMITS AND FITS

4.1 Identify the components of the clearance fit in Figure 2 below. Write only the answer next to the letter (A–D) in the ANSWER BOOK.

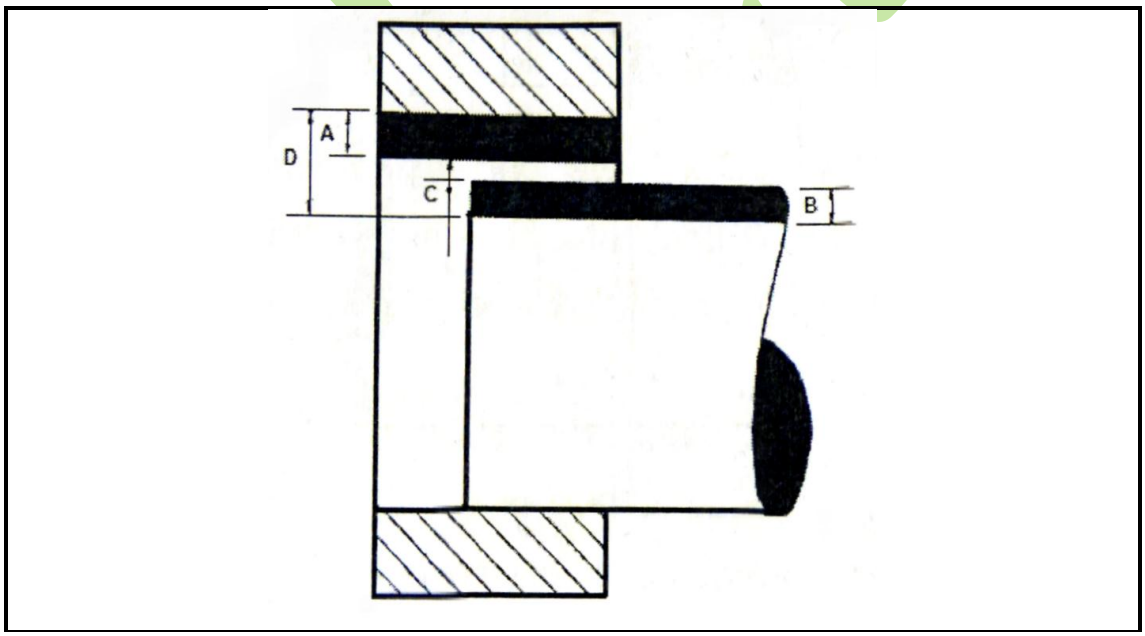

(4)

FIGURE 2

4.2 Name the THREE elements that play a role in the allowance of any type of fit. (3)

4.3 A fit is given as 55 H6 f4.

Explain the meaning of 55 H6 and f4. (3)

Copyright reserved

4.4 Classify the following fits:

4.4.1 20 H9 e9

4.4.2 30 H7 k6

4.4.3 35 H7 p6

4.4.4 40 H11 c11

4.4.5 50 H8 f7

(5 × 1) (5)

[15]

QUESTION 5: PRECISION MEASURING

5.1 What is the purpose of the wear blocks in a Johansson gauge block set? (2)

5.2 Describe a sine bar. (2)

5.3 What can you say about the two rollers of a sine bar? (1)

5.4 Determine the minimum Johansson gauge blocks for a size of 69,3475 mm using the M50 set. (5)

5.5 Name the indicated parts of the height gauge in Figure 3 below. Write only the answer next to the number (1–4) in the ANSWER BOOK.

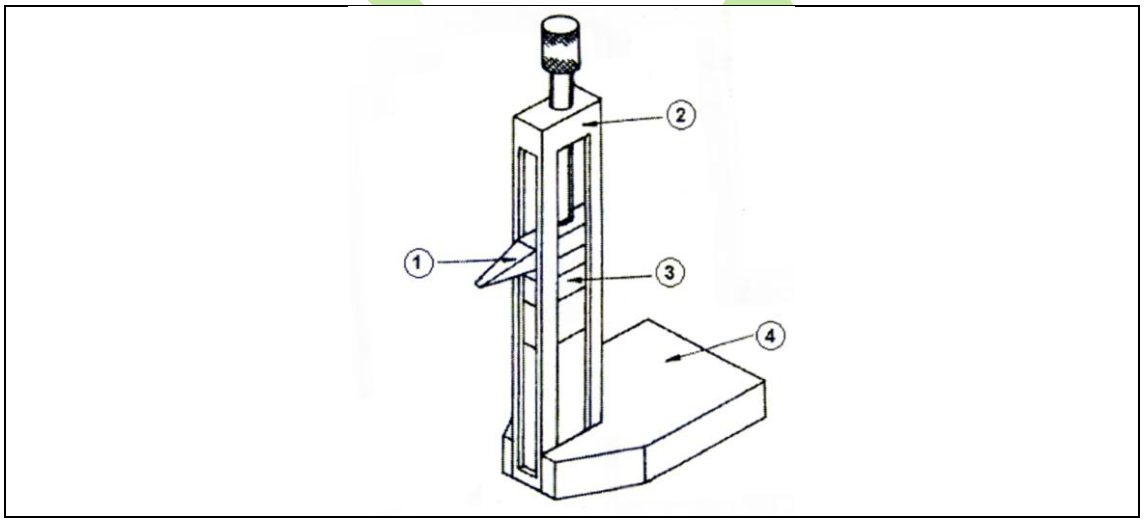

(4)

FIGURE 3

[14]

QUESTION 6: GAUGES

6.1 Describe gauges. (1)

6.2 What is the function of a plug gauge? (1)

6.3 Name the THREE main groups of gauges. (3)

6.4 Why is a small flat grounded on a plug gauge? (1)

6.5 Make a neat sketch of a plug limit depth gauge. (2)

6.6 Make a neat sketch of a double-sided limit gap gauge. (2)
[10]

QUESTION 7: JIGS AND FIXTURES

7.1 State SIX advantages of making use of jigs in the production line in a mechanical press shop. (6)

7.2 Make neat sketches of a flange bush and a screwed bush. (2)
[8]

QUESTION 8: CUTTING TOOLS

8.1 What are single-point cutting tools used for? (5)

8.2 Why is carbide used for the manufacturing of cutting tips? (3)
[8]

QUESTION 9: DRILLS AND REAMERS

9.1 Which type of drill will you use to drill soft materials like aluminium and plastics? (1)

9.2 Which type of drill will you use to drill brass parts and screw materials? (1)

9.3 What is the main function of the flutes on a quick spiral drill? (1)

9.4 Name the TWO parts into which the cutting edge of a drill can be divided. (2)

9.5 What is the main function of a reamer? (1)
[6]

QUESTION 10: SINKING AND FORGING

10.1 Name FOUR aspects to consider when manufacturing dies. (4)

10.2 Which is the best type of material to use for the manufacturing of dies? (1)
[5]

TOTAL: 100

Copyright reserved

ADDENDUM 1

6. Table of primary fits (hole basis system) / *Tabel van primêre passings (gatbasisstelsel)*

Nominal sizes *Nominale groottes*		CLEARANCE FITS VRYPASSINGS										TRANSITION FITS OORGANGSPASSINGS				INTERFERANCE FITS STUITPASSINGS			
		Tolerance *Toleransie*		Tolerance *Toleransie*		Tolerance *Toleransie*		Tolerance *Toleransie*		Tolerance *Toleransie*		Tolerance *Toleransie*		Tolerance *Toleransie*		Tolerance *Toleransie*		Tolerance *Toleransie*	
Over *Oor* mm	To *Tot* mm	H11	c11	H9	d10	H9	e9	H8	f7	H7	g6	H7	h6	H7	k6	H7	n6	H7	p6	H7	s6
UNIT / *EENHEID* 0,001 mm																					
10	18	+110	-95	+43	-50	+43	-32	+27	-16	+18	-6	+18	-11	+18	+12	+18	+23	+18	+29	+18	+39
		0	-205	0	-120	0	-59	0	-34	0	-17	0	0	0	+1	0	+12	0	+18	0	+28
18	30	+130	-110	+52	-65	+52	-40	+33	-20	+21	-7	+21	-13	+21	+15	+21	+28	+21	+35	+21	+48
		0	-204	0	-149	0	-92	0	-41	0	-20	0	0	0	+2	0	+15	0	+22	0	+35
30	40	+160	-120																		
		0	-280	+62	-80	+62	-50	+39	-25	+25	-9	+25	-16	+25	+18	+25	+33	+25	+42	+25	+59
40	50	+160	-130	0	-180	0	-112	0	-50	0	-25	0	0	0	+2	0	+17	0	+26	0	+43
		0	-290																		

Copyright reserved

ADDENDUM 2

M50 SET

RANGE/SIZE (mm)	INCREMENTS (mm)	NUMBER OF PIECES
1,0025 – 1,0075	0,0025	3
1,01 – 1,09	0,01	9
1,1 – 1,9	0,1	9
1 - 25	1	25
50 - 100	25	3
0,50	-	1
		50

Copyright reserved