higher education & training

Department:
Higher Education and Training
REPUBLIC OF SOUTH AFRICA

T1730**(E)**(A10)T

NATIONAL CERTIFICATE

TOOLMAKERS' THEORY N2

(11020202)

10 April 2019 (X-Paper)
09:00–12:00

This question paper consists of 7 pages and 2 addenda.

Copyright reserved

DEPARTMENT OF HIGHER EDUCATION AND TRAINING
REPUBLIC OF SOUTH AFRICA

NATIONAL CERTIFICATE
TOOLMAKERS THEORY N2
TIME: 3 HOURS
MARKS: 100

INSTRUCTIONS AND INFORMATION

1. Answer ALL the questions.
2. Read ALL the questions carefully.
3. Number the answers according to the numbering system used in this question paper.
4. Sketches must be large, neat and fully labelled.
5. Write neatly and legibly.

Copyright reserved

QUESTION 1: OCCUPATIONAL SAFETY

1.1 Explain in your own words what a machine shop that complies with industrial housekeeping would look like. (3)

1.2 Indicate whether the following statements are TRUE or FALSE. Choose the answer and write only 'True' or 'False' next to the question number (1.2.1–1.2.5) in the ANSWER BOOK.

1.2.1 A machine should be cleaned and measurements taken while the machine is in motion.

1.2.2 A machine should be operated while wearing loose-fitting clothing, belts or ties.

1.2.3 A hacksaw should be used for cutting material that is clamped onto a lathe while the lathe is running.

1.2.4 If filing is done near the chuck of a lathe, the file must be used left-handed.

1.2.5 A machine should never be left unattended while it is in motion.

(5 × 1) (5)

1.3 What is the purpose of a 'No admittance' sign? (1)

[9]

QUESTION 2: STEELS AND TOOL STEELS

2.1 Define the following as used in the engineering industry:

2.1.1 Elasticity

2.1.2 Ductility

2.1.3 Plasticity

2.1.4 Hardness

2.1.5 Brittleness

2.1.6 Malleability

(6 × 1) (6)

2.2 Name the FIVE expensive alloying elements of high-speed steel. (5)

[11]

Copyright reserved

QUESTION 3: HEAT TREATMENT AND HARDNESS TESTING

3.1 Name FOUR disadvantages of crude oil furnaces. (4)

3.2 Name the SIX components of the Brinell test machine in FIGURE 1 below. Write only the answer next to the letter (A–F) in the ANSWER BOOK. (6)

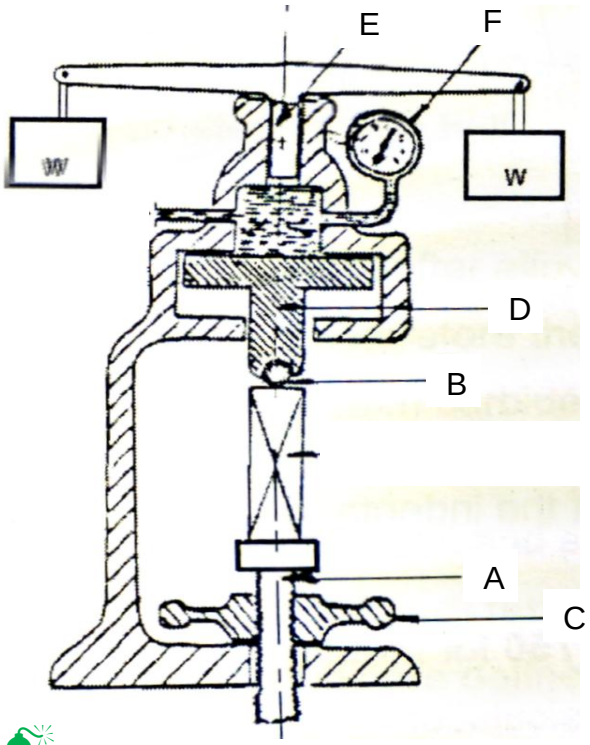

FIGURE 1

[10]

QUESTION 4: LIMITS AND FITS

4.1 Identify the following fits:

4.1.1 20 H9 d10

4.1.2 25 H7 k6

4.1.3 35 H7 p6

4.1.4 40 H11 c11

4.1.5 45 H7 n6

(5 × 1) (5)

4.2 What is the shaft and hole limits of a 20 H7 g6 fit? (4)

4.3 Explain the term *nominal size*. (1)

[10]

QUESTION 5: PRECISION MEASURING

5.1 Calculate the distance 'h' in FIGURE 2 below. The angle is 23° 36'.

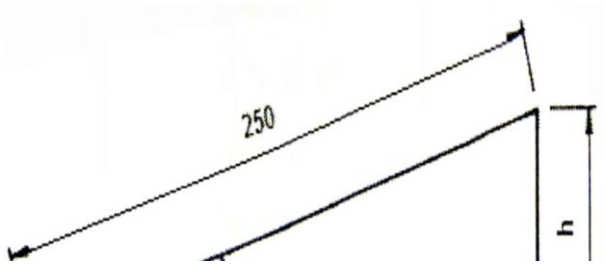

FIGURE 2 (4)

5.2 Determine the minimum gauge blocks required to build the distance in QUESTION 5.1.

Make use of a M45 set gauge blocks. (5)

5.3 Make a neat sketch to illustrate the set-up with the sine bar and gauge blocks in position. (2)

[11]

QUESTION 6: GAUGES

6.1 What methods would you select to compensate for gauge wearing? (4)

6.2 Give four possibilities in the mass production line where you will make use of gauges to measure the sizes of the components. (4)

6.3 Why is a flat grounded on a standard plug? (2)

[10]

Copyright reserved

QUESTION 7: JIGS AND FIXTURES

7.1 Describe the difference between a *jig* and a *fixture*. (2)

7.2 Identify the numbered parts in FIGURE 3 below. Write only the answer next to the number (1–4) in the ANSWER BOOK.

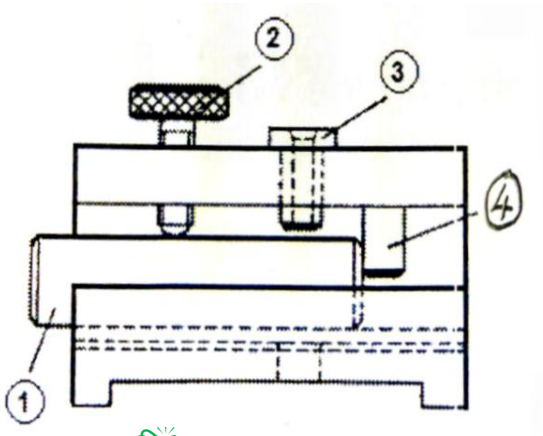

(4)

FIGURE 3

7.3 Name FOUR types of bushes that are used for drilling jigs. (4)

[10]

QUESTION 8: CEMENTED CARBIDE TIP AND CUTTING TOOLS

8.1 Make a neat sketch of each of the following rake angles of a cutting tool:

8.1.1 Positive rake

8.1.2 Zero or neutral rake

8.1.3 Negative rake

(3 × 1) (3)

8.2 Why would you recommend tungsten carbide tip tools for cutting work? (2)

8.3 Explain the term *shaving*. (1)

8.4 Why would the approach angle on a knife-edge cutting tool be more than 90°? (2)

8.5 How would you classify the difference between a right-hand roughing tool and a left-hand roughing tool? (2)

[10]

Copyright reserved

QUESTION 9: DRILLS AND REAMERS

9.1 Give FIVE advantages of applying the right coolant correctly during a drilling operation. (5)

9.2 Name FIVE types of reamers. (5)
[10]

QUESTION 10: DIE-SINKING AND FORGING

10.1 Explain the meaning of the term *dies.* (2)

10.2 What materials should we used to build dies? (2)

10.3 Make a neat sketch of a split die. (2)

10.4 Name THREE methods that can be used in forging to stamp and manufacture components. (3)
[9]

TOTAL: 100

Copyright reserved

ADDENDUM A

Set No. M45

Range or size (mm)	Increment in mm	No. of pieces
1,001 – 1,009	0,001	9
1,01 – 1,09	0,01	9
1,1 – 1,9	0,1	9
1 – 9	1	9
10 – 90	10	9
	Total	45

Copyright reserved

ADDENDUM B

6. Table of primary fits (hole basis system) / *Tabel van primêre passings (gatbasisstelsel)*

Nominal sizes *Nominale groottes*		CLEARANCE FITS VRYPASSINGS												TRANSITION FITS OORGANGSPASSINGS				INTERFERANCE FITS STUITPASSINGS			
		Tolerance *Toleransie*		Tolerance *Toleransie*		Tolerance *Toleransie*		Tolerance *Toleransie*		Tolerance *Toleransie*		Tolerance *Toleransie*		Tolerance *Toleransie*		Tolerance *Toleransie*		Tolerance *Toleransie*		Tolerance *Toleransie*	
Over *Oor* mm	To *Tot* mm	H11	c11	H9	d10	H9	e9	H8	f7	H7	g6	H7	h6	H7	k6	H7	n6	H7	p6	H7	s6
		UNIT / *EENHEID* 0,001 mm																			
10	18	+110	-95	+43	-50	+43	-32	+27	-16	+18	-6	+18	-11	+18	+12	+18	+23	+18	+29	+18	+39
		0	-205	0	-120	0	-75	0	-34	0	-17	0	0	0	+1	0	+12	0	+18	0	+28
18	30	+130	-110	+52	-65	+52	-40	+33	-20	+21	-7	+21	-13	+21	+15	+21	+28	+21	+35	+21	+48
		0	-204	0	-149	0	-92	0	-41	0	-20	0	0	0	+2	0	+15	0	+22	0	+35
30	40	+160	-120																		
		0	-280	+62	-80	+62	-50	+39	-25	+25	-9	+25	-16	+25	+18	+25	+33	+25	+42	+25	+59
40	50	+160	-130	0	-180	0	-112	0	-50	0	-25	0	0	0	+2	0	+17	0	+26	0	+43
		0	-290																		

Copyright reserved