higher education & training

Department:
Higher Education and Training
REPUBLIC OF SOUTH AFRICA

NATIONAL CERTIFICATE

RIGGING THEORY N1

(11041841)

11 August 2021 (X-paper)
09:00–12:00

Drawing instruments and nonprogrammable calculators may be used.

This question paper consists of 7 pages and 1 formula sheet.

270Q1G2111

Copyright reserved

DEPARTMENT OF HIGHER EDUCATION AND TRAINING
REPUBLIC OF SOUTH AFRICA

NATIONAL CERTIFICATE
RIGGING THEORY N1
TIME: 3 HOURS
MARKS: 100

INSTRUCTIONS AND INFORMATION

1. Answer all the questions.
2. Read all the questions carefully.
3. Number the answers according to the numbering system used in this question paper.
4. Start each question on a new page.
5. Use only a black or blue pen.
6. Write neatly and legibly.

Copyright reserved

QUESTION 1

1.1 Various options are given as possible answers to the following questions. Choose the answer and write only the letter (A–D) next to the question number (1.1.1–1.1.10) in the ANSWER BOOK.

1.1.1 Hard fibre safety hats or helmets are generally used by …

A female workers only.
B male workers only.
C both male and female workers.
D workers exposed to falling bolts, nuts, rivets or other objects.

1.1.2 A rigger must only work …

A by himself.
B with his assistant.
C with the fitters.
D with qualified personnel.

1.1.3 If a machine has any technical problems that may cause malfunction it …

A should be used until a new machine arrives.
B taken out of commission (use) and stored for maintenance.
C it must be reported and wait for instructions while still in use.
D wait for the machine to be broken completely.

1.1.4 To keep the load balanced the safety tip is …

A to swing from left to right.
B to form an angle of 30°.
C for the upper suspension and the load hook to form a straight line.
D to form an angle of 60°.

1.1.5 To ensure that the load does not injure people, …

A people must be 1 m away from the load.
B people must not be under the load.
C people must be 1,5 m away from the load.
D people must help to support the load.

1.1.6 When a machine is turned off, the …

A load must remain suspended.
B load must be landed.
C load must be supervised while suspended.
D area must demarcated.

Copyright reserved

1.1.7 The rigger must only use strong slings that are …

A tough.
B durable and have the ability to lift heavy objects.
C strong but slightly damaged.
D kinked.

1.1.8 When the rigger does not have a full view of the load they are lifting, then they must …

A use a spotter.
B use a designated spotter.
C use a car guard.
D do it without assistance.

1.1.9 A rigger must know their machine with regard to the …

A cost of the machine.
B make of the machine.
C weight that the machine can lift.
D colour of the machine.

1.1.10 After use, hoists and hooks must be …

A left in the workshop.
B left on the crane.
C stored in a place where it cannot be damaged by weather or other factors.
D stored in the stock yard.

(10 × 1) (10)

1.2 Precautionary measures must be taken when working in confined spaces where tanks with poisonous substances are present.

Name TWO such precautionary measures. (2)

1.3 Write down THREE safety precautions with regard to the use of safety belts. (3)

[15]

QUESTION 2

2.1 Draw a neat line sketch of a large T-needle spike used for performing long splicing. (2)

2.2 With the aid of a neat sketch, explain the care to be taken with regard to a ball peen hammer. (4)

2.3 Define the following with regard to metals:

2.3.1 Ferrous metals

2.3.2 Non-ferrous metals

(2 × 2) (4)

Copyright reserved

2.4 Name TWO examples of non-ferrous metals. (2)

2.5 The different sections of material that are available for use in the industry are shown in FIGURE 1 below.

Indicate which of the sketches (A–O) in FIGURE 1 represents the items listed below (2.5.1–2.5.3) by writing only the corresponding alphabet letter next to the question number (2.5.1–2.5.3) in the ANSWER BOOK.

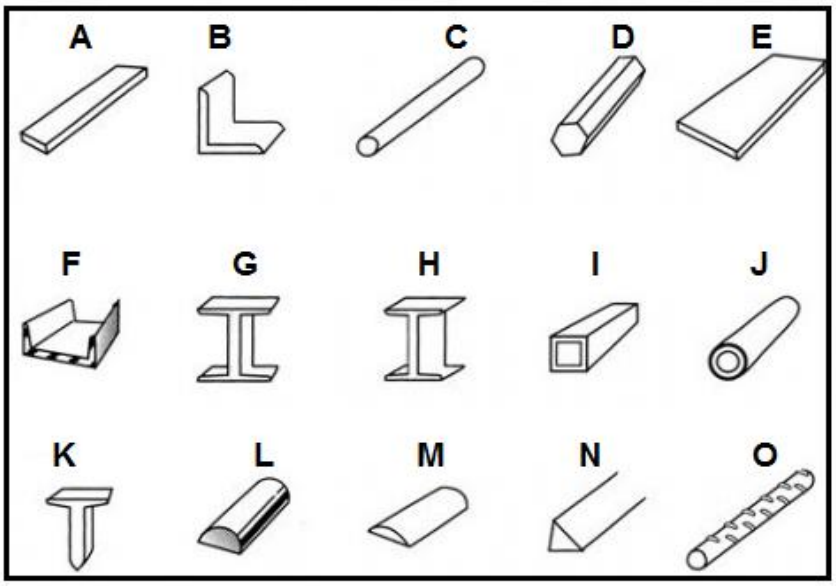

FIGURE 1

2.5.1 Angle iron

2.5.2 Channel iron

2.5.3 Pipe

(3 × 1) (3)
[15]

QUESTION 3

3.1 Explain what is meant by the term, *scaffolding*. (3)

3.2 Explain the function of the following parts of a scaffold:.

3.2.1 Pipes and couplers (3)

3.2.2 Clamps and tubes (3)

3.2.3 Footplates or base jacks (2)

3.3 Name FOUR types of timber used in the rigging trade as scaffolding planks. (4)
[15]

Copyright reserved

QUESTION 4

4.1 Tabulate the differences between *natural vegetable fibre ropes* and *synthetic fibre ropes*. (3 × 2) (6)

4.2 Explain the construction and the plant from which the following natural fibre ropes are obtained:

4.2.1 Manilla (3)

4.2.2 Sisal (3)

4.3 Describe the effect of moisture on synthetic ropes. (2)

4.4 Indicate what is meant by the following:

4.4.1 Pre-forming

4.4.2 Post-forming

(2 × 3) (6)
[20]

QUESTION 5

5.1 Explain why thimbles are used when doing rigging work on cables and slings. (5)

5.2 Name THREE types of flat slings that are commonly used. (3)

5.3 Give THREE reasons why splicing is done on ropes. (3)

5.4 In a table, compare *wire rope slings* and *chain slings*. (4)
[15]

QUESTION 6

6.1 Explain the following types of knots:

6.1.1 Clove hitch (2)

6.1.2 Reef knot (2)

6.2 Name FOUR types of bends used in rigging. (4)

Copyright reserved

6.3 The sketch in FIGURE 2 below shows an oxygen pressure regulator. Name the parts (A–F) by writing only the name of the part next to the alphabet letter in the ANSWER BOOK.

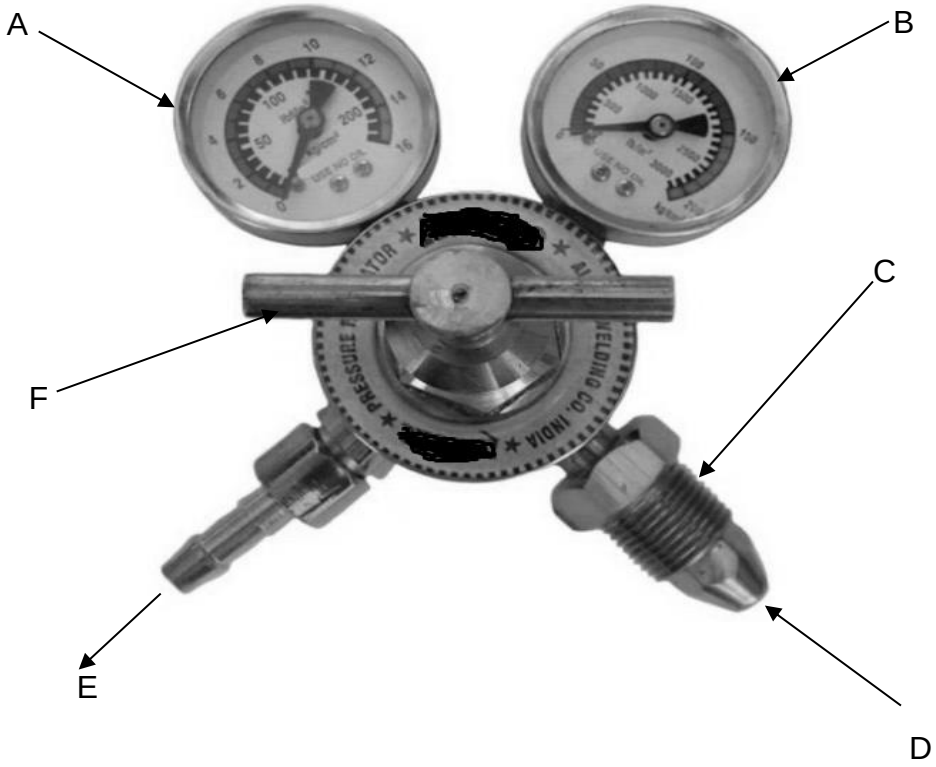

FIGURE 2 (6)

6.4 Explain the purpose of flashback arresters. (3)

6.5 Explain where flashback arresters are installed. (3)

[20]

TOTAL: 100

Copyright reserved

FORMULA SHEET

Any applicable formula may also be used:

1. $A = \pi r^2$
2. $A = \frac{1}{2.} . b. h$
3. $A = \frac{1}{4} . \pi . d^2$
4. $A = L. L$
5. $A = l . b$
6. $f = m. g$
7. $Cos\ \theta = \frac{Adjacent}{Hypoteneuse}$
8. $Sin\ \theta = \frac{Opposite}{Hypoteneuse}$
9. $Tan\ \theta = \frac{Opposite}{Adjacent}$
10. $V = l . b. h$
11. $V = \pi r^2 . h$
12. $V = A. h$
13. $Work\ done = force \times distance$
14. $Force = mass \times gravitational\ force$

Copyright reserved