higher education & training

Department:
Higher Education and Training
REPUBLIC OF SOUTH AFRICA

T1570**(E)**(A10)T

NATIONAL CERTIFICATE

RIGGING THEORY N1

(11041841)

10 April 2019 (X-Paper)
09:00–12:00

This question paper consists of 7 pages and 1 formula sheet.

Copyright reserved

DEPARTMENT OF HIGHER EDUCATION AND TRAINING
REPUBLIC OF SOUTH AFRICA

NATIONAL CERTIFICATE
RIGGING THEORY N1
TIME: 3 HOURS
MARKS: 100

INSTRUCTIONS AND INFORMATION

1. Answer ALL the questions.
2. Read ALL the questions carefully.
3. Number the answers according to the numbering system used in this question paper.
4. Keep ALL the subsections of questions together.
5. Write neatly and legibly.

Copyright reserved

QUESTION 1

1.1 Different types of lifting accessories are shown below. Choose a term from COLUMN B that matches an item in COLUMN A. Write only the letter (A–I) next to the question number (1.1.1–1.1.6) in the ANSWER BOOK.

COLUMN A		COLUMN B
1.1.1		A D-shackle B synthetic rope slings C steel rope sling D bow shackle E eye bolt F Crosby clamp G turnbuckle H chain sling I lifting lug
1.1.2		
1.1.3		
1.1.4		
1.1.5		
1.1.6		

(6 × 1) (6)

1.2 State SEVEN safety precautions that must be considered when transporting gas cylinders with a trolley. (7 × 1) (7)

1.3 State TWO visual defects to look for on a steel rope sling before using it for lifting equipment. (2 × 1) (2)

[15]

QUESTION 2

2.1 Name THREE types of mallets used during a rigging process. (3)

2.2 State ONE purpose of each of the THREE mallets that is mentioned in QUESTION 2.1. (6)

2.3 Make a neat, labelled sketch of each of the following profiles used during a rigging process:

2.3.1 I-beam

2.3.2 Channel iron

(2 × 3) (6)

[15]

QUESTION 3

3.1 State ONE purpose of each of the following components used during the erecting of scaffolding:

3.1.1 Apron

3.1.2 Base plate

3.1.3 Guard rail

(3 × 2) (6)

3.2 Name the defects on the timber used during scaffolding shown in FIGURE 1. Write only the defect next to the letter (A–F) in the ANSWER BOOK.

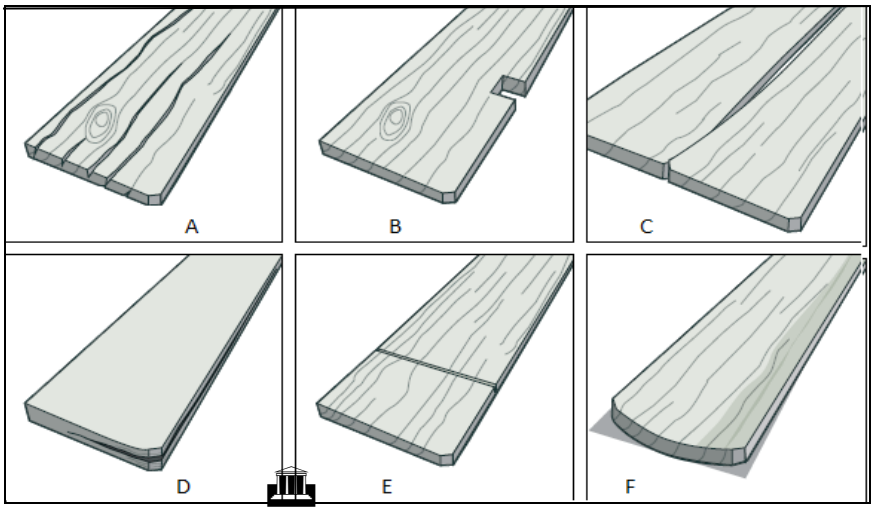

FIGURE 1 (6 × 1) (6)

3.3 Explain why steel planks are used more than timber in scaffolding. (3 × 1) (3)

[15]

QUESTION 4

4.1 FIGURE 2 shows a *single-leg choker with a sliding hook*. Name the components indicated by writing only the answer next to the letter (A–E) in the ANSWER BOOK.

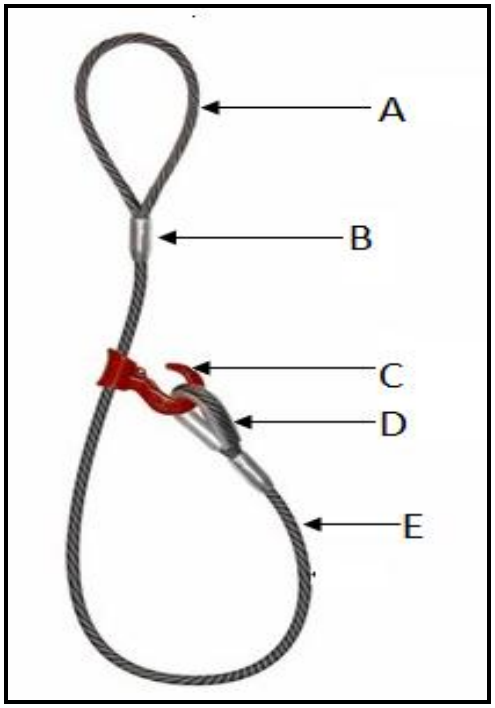

FIGURE 2 (5 × 1) (5)

4.2 State FIVE points that must be taken into consideration when assessing steel wire ropes. (5 × 1) (5)

4.3 Draw simple sketches to show how the following rope slings are joined together to form a single-leg sling.

4.3.1 Double-part grommet

4.3.2 Double-part cable laid grommet

(2 × 1) (2)

4.4 State FIVE rules that must be observed when handling non-spin ropes. (5)

4.5 Draw a neat, labelled sketch of open sockets on both ends. (3)

[20]

QUESTION 5

5.1 FIGURE 3 shows a solid square block with a mass of 2 500 kg that needs to be lifted up a mine shaft from a depth of 100 metres.

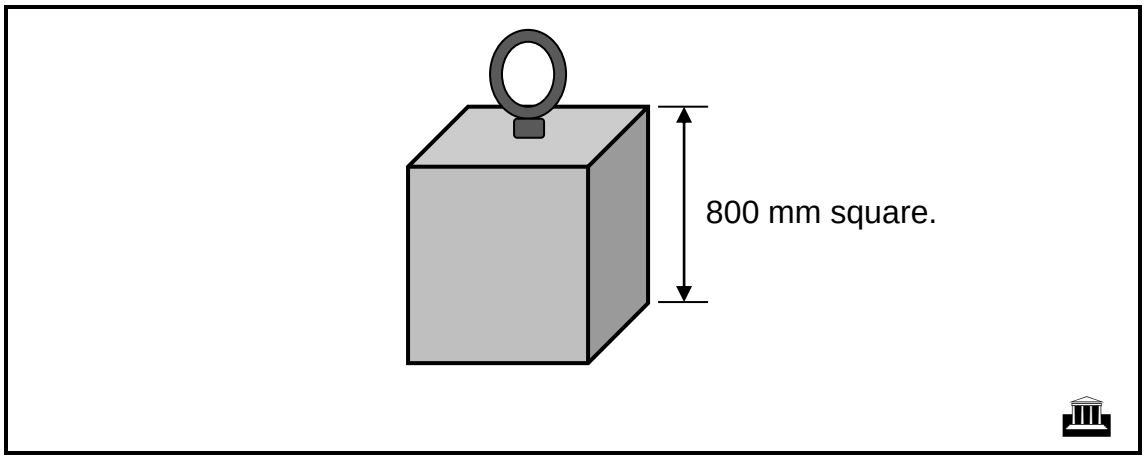

FIGURE 3

5.1.1 Calculate the area of the solid square block ignoring the eye bolt. (3)

5.1.2 Calculate the volume of the solid square block. (3)

5.1.3 Calculate the work done of the solid square block that needs to be lifted from the mine shaft with a gravitational force of 9,81 m/s. (4)

5.2 Define the following rigging terms:

5.2.1 Coil (1)

5.2.2 Core (2)

5.2.3 Clips or clamps (2)

[15]

QUESTION 6

6.1 Make a neat sketch to show what a *double Carrick bend* looks like. (2)

6.2 Explain how a rolling hitch is made. (3)

6.3 FIGURE 4 shows different types of personal protective equipment used during oxyacetylene cutting. Name the equipment by writing only the answer next to the letter (A–D) in the ANSWER BOOK.



FIGURE 4 (4 × 1) (4)

6.4 Explain the correct procedure of adjusting a neutral flame on the oxyacetylene cutting equipment. (8)

6.5 State THREE advantages of the oxyacetylene process. (3 × 1) (3)

[20]

TOTAL: 100

Copyright reserved

FORMULA SHEET

Any applicable formula may also be used:

1. $A = \pi r^2$
2. $A = \frac{1}{2.} . b. h$
3. $A = \frac{1}{4} . \pi . d^2$
4. $A = L. L$
5.. $A = l . b$
6. $f = m. g$
7. $Cos\ \theta = \frac{Adjacent}{Hypoteneuse}$
8. $Sin\ \theta = \frac{Opposite}{Hypoteneuse}$
9. $Tan\ \theta = \frac{Opposite}{Adjacent}$
10. $V = l . b. h$
11. $V = \pi r^2 . h$
12. $V = A. h$
13. $Work\ done = force \times distance$
14. $Force = mass \times gravitational\ force$

Copyright reserved