higher education & training

Department:
Higher Education and Training
REPUBLIC OF SOUTH AFRICA

MARKING GUIDELINE

NATIONAL CERTIFICATE

REFRIGERATION TRADE THEORY N3

4 August 2021

This marking guideline consists of 7 pages.

Copyright reserved

QUESTION 1

1.1
1.1.1 C
1.1.2 B
1.1.3 A
1.1.4 E
1.1.5 D

(5 × 1) (5)

1.2
1.2.1 Melting or fusion (1)
1.2.2 Process whereby liquid phase changes to vapour phase (2)
1.2.3 Temperature too low (1)
1.2.4 Sensible heat (1)
1.2.5 Latent heat (1)

1.3
- Fluids absorb heat while changing from liquid state to vapour state✓ and give up heat✓ in changing from vapour to liquid✓
- Temperature at which change of state✓ occurs is constant✓ during change provided pressure remains constant✓
- Heat only flows✓ from body at higher temperature✓ to body at lower temperature✓
- Metallic parts of evaporator✓ and condenser✓ units use metals with high heat conductivity✓
- Heat energy✓ and other forms of energy✓ are interchangeable✓.

(Any other 1 × 3) (3)

1.4
1.4.1 Specific heat capacity of substance is amount of heat required to raise temperature✓ of unit mass (1kg) of it by 1K✓.

1.4.2 Any heat, which when added to body or substance, changes its phase✓ without change in temperature✓

1.4.3 Any heat, which when added to body or substance✓, increases its temperature✓

(3 × 2) (6)
[20]

QUESTION 2

2.1
- First law of thermodynamics states that energy cannot be created✓ nor destroyed✓
- Second law of thermodynamics states that heat always flows✓ from body at high temperature to body at lower temperature✓ (2 × 2) (4)

2.2

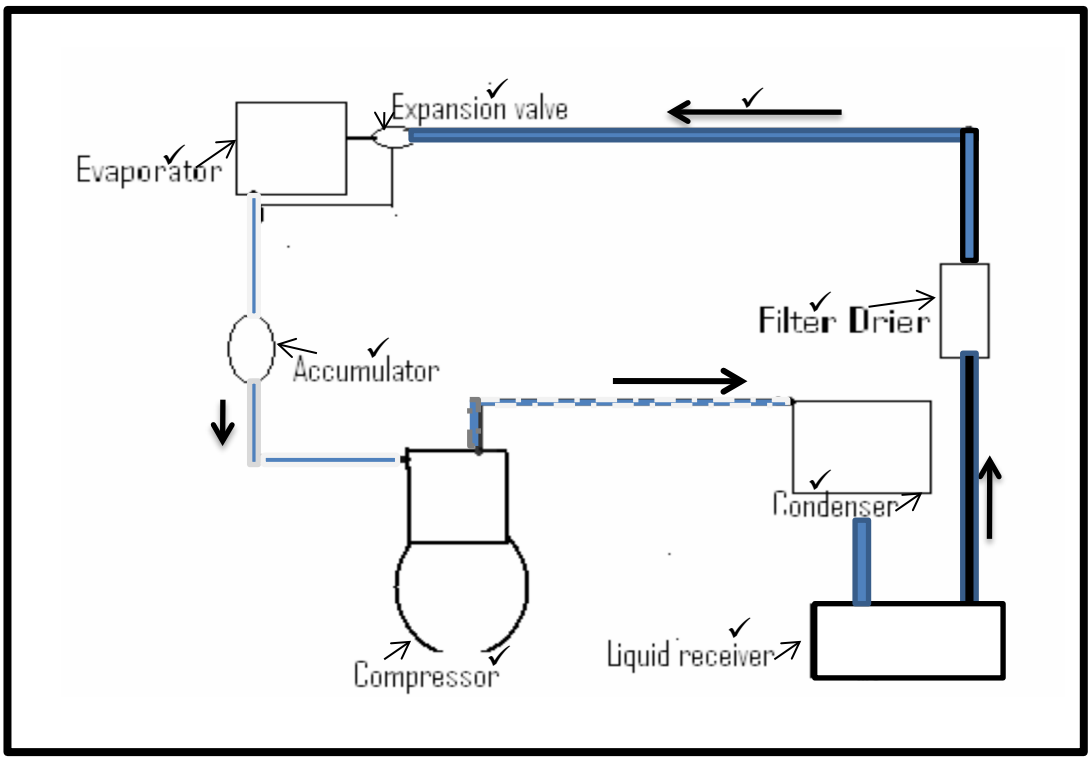

(8)

2.3
2.3.1 Evaporator✓ to compressor✓
2.3.2 Compressor✓ to condenser✓
2.3.3 Condenser✓ to expansion valve✓
2.3.4 Expansion valve✓ to evaporator✓

(4 × 2) (8)
[20]

QUESTION 3

3.1

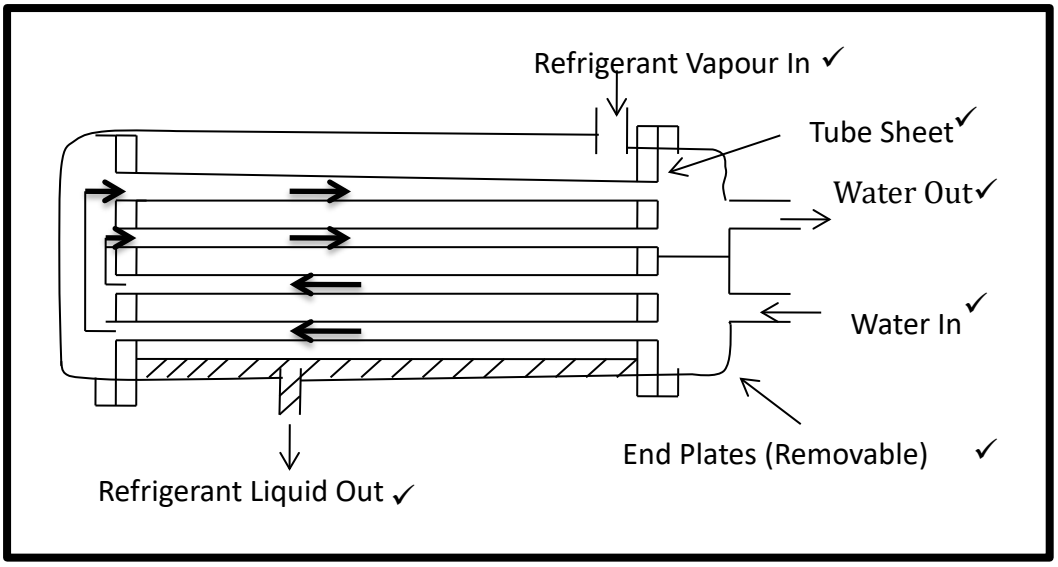

(6)

3.2

$$Vp=\frac{\pi D^2 SNR}{4}$$
$$=\frac{3,142\times(0,08)^2\times0,088\times8\times20}{4}\ \checkmark$$
$$=0,0708\ m^3/s\ \checkmark$$
$$\eta=\frac{V}{VP}\ \checkmark$$
$$=\frac{0,0225}{0,0708}\times\frac{100}{1}\ \checkmark$$
$$=31,8\%\ \checkmark$$

(5)

3.3

A – Suction line
B – Filter drier
C – Capillary tube
D – Heat exchanger
E – Evaporator
F – Accumulator
G – Condenser
H – Compressor
I – High side gauge

(9 × 1) (9)

[20]

QUESTION 4

4.1	4.1.1	Regulate functions of plant to ensure it meets demands for design which uses it	
	4.1.2	Regulate functions of plant to ensure that these stay within design parameters	
		(2 × 2)	(4)
4.2	4.2.1	Thermometer✓ to measure temperature within refrigerator or freezer✓✓	
	4.2.2	Thermostat✓ to sense temperature of fluid, compares it with required temperature and switches on or off✓✓	
	4.2.3	Low and high pressure switch✓ to switch plant on and off due to low pressure or high pressure load conditions✓✓	
		(3 × 3)	(9)
4.3	4.3.1	Consists of a cylinder filled with a chemical✓ which absorbs moisture from refrigerant flowing through it✓ and catches up impurities✓	(3)
	4.3.2	Liquid line	(1)
4.4	4.4.1	Centrifugal fan	(1)
	4.4.2	• Less noise • Efficient operation at high pressure	(2)
			[20]

QUESTION 5

5.1
- Current type relay
- Potential-type relay
- Semiconductor relay

(Any 2 × 1) (2)

5.2

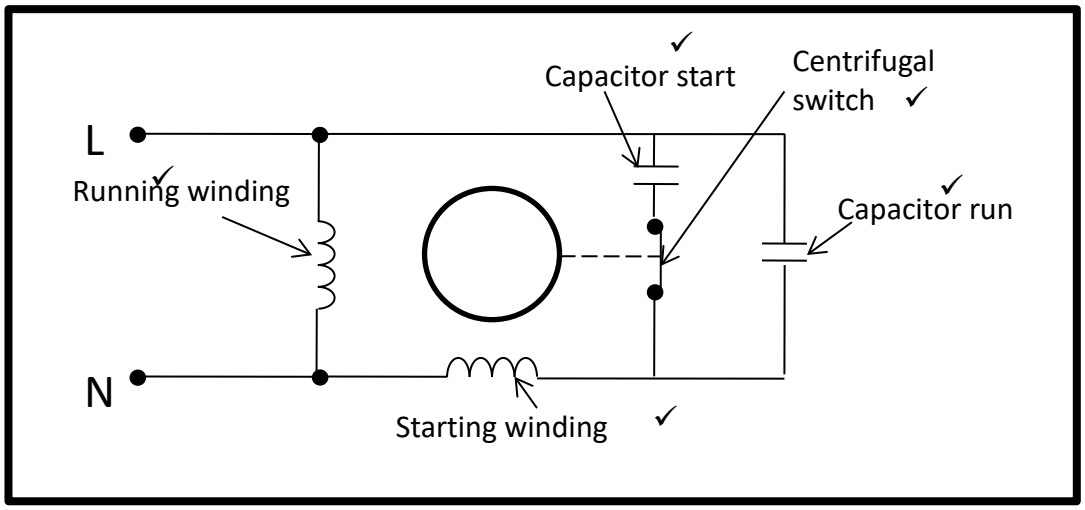

(5)

5.3
$$\frac{1}{C_T} = \frac{1}{C_1} + \frac{1}{C_2}$$
$$= \frac{1}{15} + \frac{1}{30} \checkmark$$
$$= \frac{2+1}{30}$$
$$= \frac{30}{3} \checkmark$$

=10μF✓ (3)

5.4 5.4.1 Re $= h_1 - h_4$
= 80,46 – 36,16✓
= 44,3 KJ/Kg✓

5.4.2. WD $= h2 - h_1$
= 94,06 - 80,46✓
= 13,6 KJ/Kg✓

5.4.3 COP $= \frac{Re}{WD}$

$= \frac{44,3}{13,6} \checkmark$

$= 3,26 \checkmark$

5.4.4 Mass flow $= \frac{Load}{Re}$

$= \frac{30}{44,3}$ ✓

$= 0,68\ Kg/S$ ✓

5.4.5 Power $= \frac{WD\ x\ \dot{m}}{\eta}$

$= \frac{13,6x\ 0,68}{0,80}$ ✓

$= 11,56\ KW$ ✓

(5 × 2) (10)
[20]

TOTAL: 100

Copyright reserved