higher education & training

Department:
Higher Education and Training
REPUBLIC OF SOUTH AFRICA

T1560**(E)**(A5)T

NATIONAL CERTIFICATE

REFRIGERATION TRADE THEORY N3

(11041583)

5 April 2019 (X-Paper)
09:00–12:00

This question paper consists of 6 pages and a formula sheet of 6 pages.

Copyright reserved

DEPARTMENT OF HIGHER EDUCATION AND TRAINING
REPUBLIC OF SOUTH AFRICA

NATIONAL CERTIFICATE
REFRIGERATION TRADE THEORY N3
TIME: 3 HOURS
MARKS: 100

INSTRUCTIONS AND INFORMATION

1. Answer ALL the questions.
2. Read ALL the questions carefully.
3. Number the answers according to the numbering system used in this question paper.
4. Write neatly and legibly.

Copyright reserved

QUESTION 1

1.1 FIGURE 1 shows a simple mechanical refrigeration cycle. Name the components indicated by the arrows in the sketch and the purpose of each component. Write the answer next to the number (1.1.1–1.1.3) in the ANSWER BOOK.

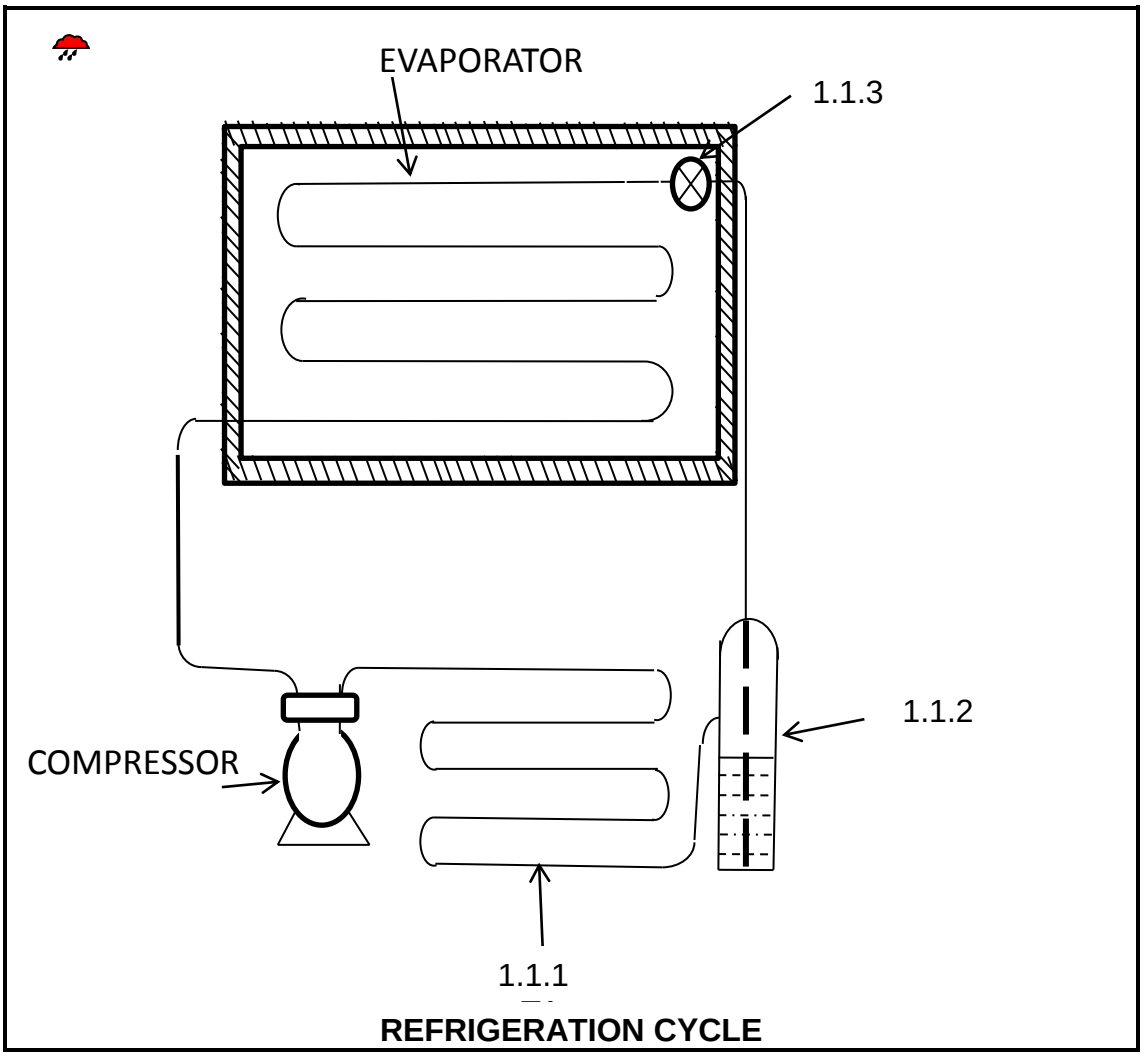

REFRIGERATION CYCLE

FIGURE 1 (3 × 3) (9)

1.2 Briefly explain the following terms with regard to the refrigeration cycle in FIGURE 1:

1.2.1 Evaporation

1.2.2 Compression

(2 × 3) (6)

1.3 Name FIVE electrical or mechanical safety devices used in refrigeration systems. (5)

[20]

QUESTION 2

2.1 State TWO basic thermal laws of refrigeration. (2 × 2) (4)

2.2 What will the new volume be when 160 l of gas that exerts a pressure of 170 kPa indicated on an ordinary pressure gauge is compressed to 470 kPa? (3)

2.3 A gas with a volume of 0,45 l at 30 ^{o}C has a pressure of 34 kPa. The temperature is raised to 35 ^{o}C and the volume increases to 0,46 l.

What will be the new pressure that the gas exerts? (3)

2.4 Explain the *hot-gas defrost system* as used on a domestic refrigerator. (4)

2.5 Make a neat, labelled wiring diagram of a frozen food cabinet. Show the current type starting relay, compressor motor, thermostat signal, lid light and switch. (6)

[20]

QUESTION 3

3.1 Make a neat, labelled sketch of a stationary bellows-type seal. (6)

3.2 The cooling capacity of a refrigeration plant is 40 kW. The coefficient of performance of the plant is 4,9. The refrigerant enthalpy gain in the evaporator is 135 kJ/kg.

Calculate :

3.2.1 The refrigerant mass flow rate

3.2.2 The work of compression

3.2.3 The power required by the compressor motor if the efficiency is 90%

3.2.4 The total amount of heat rejected by the condenser

(4 × 2) (8)

3.3 Briefly explain the following terms:

3.3.1 Operational controls

3.3.2 Safety controls

3.3.3 Control systems

(3 × 2) (6)

[20]

Copyright reserved

QUESTION 4

4.1 Name THREE different types of condensers used in commercial refrigeration. (3)

4.2 Draw a neat, labelled sketch of the shell-and-tube condenser. (6)

4.3 Name FIVE methods used to control the capacity of a compressor. (5)

4.4 Briefly explain the operation of a motor temperature sensor usually used in most hermetic types of compressors. (4)

4.5 State ONE advantage of the force-feed type of lubrication. (2)
[20]

QUESTION 5

5.1 State FOUR types of mechanical faults that can occur in a refrigeration plant. (4)

5.2 Draw a neat, labelled circuit diagram of a current-type starting relay. Clearly indicate the following on the circuit diagram:

- Line
- Overload protector
- Compressor motor
- Current relay
- Starting capacitor
- Neutral (6)

5.3 FIGURE 2 shows a capacitor-start capacitor-run motor. Name the components indicated by arrows and write only the answer next to the question number (5.3.1–5.3.5) in the ANSWER BOOK.

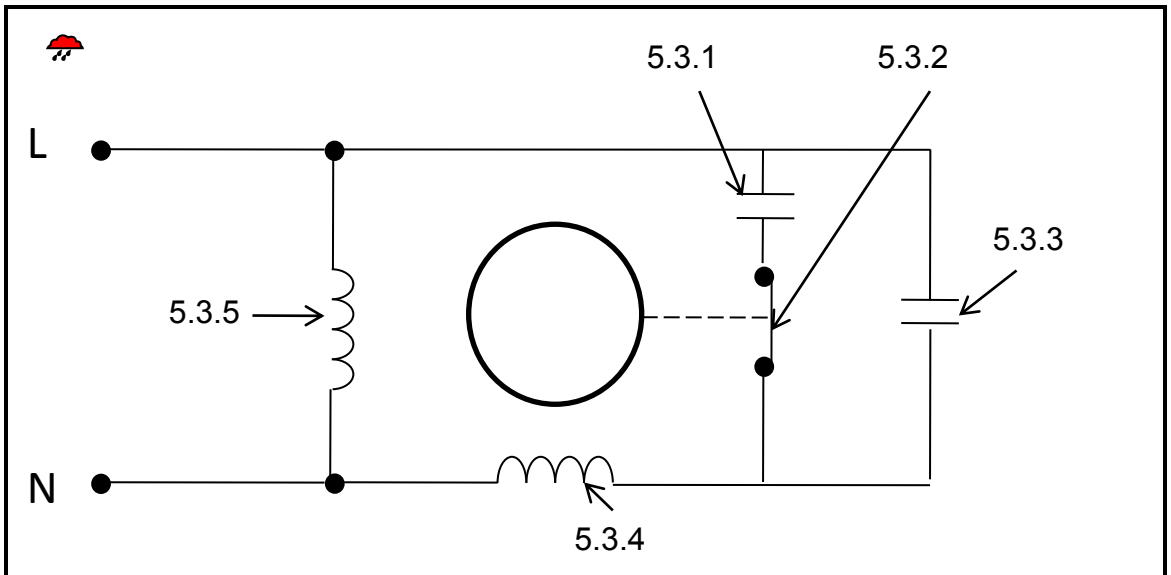

CAPACITOR-START, CAPACITOR-RUN MOTOR

FIGURE 2 (5)

5.4 Which capacitor mentioned in QUESTION 5.3 has the lowest value? (1)

5.5 What is the purpose of the centrifugal switch in single-phase motors? (2)

5.6 Briefly explain how the direction of rotation of a permanent-split capacitor motor may be reversed. (2)

[20]

TOTAL: 100

Copyright reserved

FORMULAE

REFRIGERATION TRADE THEORY N3

1. $Density = \frac{mass}{volume} \quad \therefore \rho = \frac{m}{v}\ kg/m^3$

   also $\rho = \frac{1}{v}\ kg/m^3 \quad (v = specific\ volume)$

2. $Specific\ volume\ (v) = \frac{1}{density} = \frac{1}{\rho}\ m^3/kg$

3. Greek symbols: $\eta = efficiency\ (neta)$
   $\rho = density\ (rho)$

4. $Mass\ flow\ rate: \left(\dot{m}\right)$

   $\dot{m} = \dot{V} \times \rho \ \ kg/s$

   $OR\ \dot{m} = \dot{V} \times \frac{1}{v} \quad \therefore \dot{m} = \frac{\dot{V}}{v}\ \ kg/s$

5. $(Quantity\ of\ heat\ (Q) for\ a\ change\ in\ temperature)$

   $Q = mC\Delta T\ \ kJ$
   $For\ a\ change\ of\ phase)$

   $Q = m.hfg$
   $(hfg\ = latent\ heat\ required)$
   $when\ the\ rate\ of\ the\ heat\ transferred\ is\ required\ the\ formula\ changes\ to:$
   $\dot{Q} = \dot{m}\ .\ hfg\ kJ/s\ or\ kW$

6. $Specific\ enthalphy\ (h)$

   To calculate the total energy transfer
   $\dot{Q} = \dot{Q}.\Delta h\ \ kJ/s\ or\ kW$

7. $Boyle's\ law$:

   $P_1V_1 = P_2V_2\ (at\ constant\ temperature)$

8. $Charles'\ law$:
   $\frac{V_1}{T_1} = \frac{V_2}{T_2}$

9. $Ideal\ gas\ law$:
   $\frac{P_1V_1}{T_1} = \frac{P_2V_2}{T_2}$

Copyright reserved

10. *The gas constant* (R)

$$R = \frac{Pv}{T} \quad J/kg.K$$

11. $Comperssor\ efficiency = \frac{Actual\ displacement\ (V)}{Thermal\ displacement\ (V\rho)}$

$$\eta = \frac{V}{V\rho} \times \frac{100}{1} = \%$$

12. *Theoretical displacement*:

$$V\rho = \frac{\pi \times D^2 \times L \times n \times N}{4}\ m^3/min$$

$$OR\ = \frac{\pi \times D^2 \times s \times N \times R}{4}\ m^3/min$$

$NOTE: (\pi = 3{,}142)$

13. *Evaporator capacity*:

(a) *The quantity of sensible heat transferred in watts (evaporator sensible capacity)* $\left(\overset{\circ}{Q}\right)$

$$\overset{\circ}{Q}\ = U\ .A\ .\Delta t\ watts$$

(b) *Overall heat transfer coefficient* $('U' - factor)$

$$U = \frac{1}{R}\ \ W/m^2.℃$$

(c) *Resistance of surface to heat flow* (R)

$$R = \frac{1}{U} = \frac{1}{h_0} + \frac{x}{k} + \left(\frac{Ao}{A_1} + \frac{1}{h_1}\right) \quad m^2.℃/W$$

(d) *Log mean temperature diferrence* $(LMTD)$

$$LMTD = \frac{(te - tr) - (t\ell - tr)}{\log n\left(\frac{te - tr}{t\ell - tr}\right)}\ ℃$$

14. *Condenser load*:

(a) *Total heat rejected of condenser in kW* (THR)

$$THR = \overset{\circ}{Qe}\ +\ \overset{\circ}{Q}\ i \quad \text{kW}$$

Also $THR = refrigeration\ capacity \times heat\ rejected\ factor$

(b) *Condenser capacity* $\left(\overset{\circ}{Q}\right)$

$$\overset{\circ}{Q} = U\ .A\ .\Delta t \quad kW$$

(c) $LMTD = \frac{(tr - t\ell) - (tr - te)}{log\ n\left(\frac{tr - t\ell}{tr - te}\right)}$

Copyright reserved

15. *The pressure enthalphy diagram*:

(a) *Refrigeration effect* (Re)

$Re = h_1 - h_4 \quad kJ/kg$

(b) *Heat of compression* (WD)

$WD = h_2 - h_1 \quad kJ/kg$

(c) *Heat rejection* (THR)

$THR = h_2 - h_3 \quad kJ/kg$

(d) *Coefficient of performance* (COP):

$$COP = \frac{Re}{WD} \ (cooling)$$

$$COP = \frac{THR}{WD} \ \textit{(heat pump)}$$

(e) *Refrigerant mass flow* $\left(\overset{\circ}{m}\right)$

$$\overset{\circ}{m} = \frac{Load}{Re} \ kg/s$$

(f) $Plant\ capacity = \overset{\circ}{m} \times Re \quad kW$

(g) $Theoretical\ power = \overset{\circ}{m} \times WD \quad kW$

(h) $Actual\ power = \frac{\overset{\circ}{m} \times WD}{\eta} \quad kW$

(i) *Total heat rejected in kW* (THR)

$THR\ in\ kW = \overset{\circ}{m} \times THR\ in\ kJ/kg\ kW$

(j) *The efficiency of a comressor*:

$$\% = \frac{Theoretical\ power\ input}{Actual\ power\ input} \times 100$$

OR

$$\% = \frac{h_2 - h_1}{h_{1_2} - h_1} \times 100$$

16. *Cooling load calculations*:

(a) *Basic heat transfer formula*

$Q = U\ .A\ .\Delta T\ watts\ (J/S)$

(b) *To calculate total resistance against heat flow*

$$Rt = \frac{1}{h_0} + \frac{d_1}{k_1} + \frac{d_2}{k_2} \cdots + \frac{1}{h_1} \ m^2.°C/W$$

Copyright reserved

(c) *Heat transfer coefficient* (U)

$$U = \frac{1}{R_1} \quad W/m^2.℃$$

(d) *Resistance against heat flow* (R)

$$\mathrm{R} = \frac{d}{k} \quad m^2.℃/W$$

(e) *Total air change in cold room* $\left(\overset{\circ}{V}\right)$

$$\overset{\circ}{V} = \frac{V \times f}{86\,400} \quad m^3/s$$

(f) *Total air change load* $\left(\overset{\circ}{Q}\right)$

(i) $\overset{\circ}{Q} = \overset{\circ}{V} \times \rho \times (h_2 - h_1) \times 1\,000$ *watts*

or when using the table for the number of air changes:

(ii) $\overset{\circ}{Q} = \frac{V \times f \times \rho \times \Delta h}{86{,}4}$ *watts*

The above formula is the combination of the 2 formulae given in (e)*and* $(f)(i)$.

(g) *The product load*:

(i) *Sensible heat*:

$$\overset{\circ}{Q} = \frac{\overset{\circ}{m} \,.\, C \,.\Delta\, t}{86{,}4} \quad watts$$

(ii) *Latent heat*:

$$\overset{\circ}{Q} = \frac{\overset{\circ}{m}\ \Delta h}{86{,}4} \quad watts$$

(iii) *Heat respiration*:

$$\overset{\circ}{Q} = \overset{\circ}{m} \,.\, \Delta\, h \ watts$$

(h) *Miscellaneous loads*:

(i) $Eqiupment\ load = \frac{Equipment\ output \times hours\ of\ operation}{24}$ *watts*

NB: *Load and output must be given in watts*

(ii) $Lighting\ load = \frac{Wattage\ of\ lighting \times hours\ of\ operation}{24}$ *watts*

NB: When lighting is by means of fluorescent light, add 25% to the lighting load.

Copyright reserved

(iii) *Occupancy load*:

$$\overset{\circ}{Q} = \frac{Heat\ equivalent\ per\ person \times number\ of\ persons \times hours}{24} \quad watts$$

17. *Ventilation and air conditioning*:

(a) *Removal of latent heat*:

$$\overset{\circ}{Q} = \overset{\circ}{Q} \times \Delta g \times hfg \quad kW$$

$$\overset{\circ}{m} = \frac{\overset{\circ}{V}}{v} \quad kg/s$$

$$\therefore \overset{\circ}{Q} = \frac{\overset{\circ}{V} \times \Delta g \times hfg}{v}$$

(b) *Room sensible heat factor* $(RSHF)$:

$$RSHF = \frac{RSH}{RSH+RLH} = \frac{RSH}{RTH}$$

(c) *Efficiency of an evaporative cooler*:

$$\eta = \frac{ta-tc}{ta-tb}$$

(d) *Cooling and dehumidification*:

$$\overset{\circ}{Q} = \overset{\circ}{m} \ [\Delta h - hfg(\Delta g)] \ kW$$

(e) $\overset{\circ}{V}$ *of the return air*

$$\overset{\circ}{Vra} = \overset{\circ}{Vra} - \overset{\circ}{V}fa \ m^3/s$$

(f) *Air temperature of mixture in the front of coil*

$$T = \frac{\left(\overset{\circ}{V}fa \times tdbfa\right) + \left(\overset{\circ}{V}ra \times tdbra\right)}{\overset{\circ}{Vsa}} \ ℃$$

(g) *Quantity of air*:

$$\overset{\circ}{V} = \frac{\overset{\circ}{Q}}{C \times \rho \times \Delta t} \ m^3/s$$

(h) *Amount of air forced through an opening by wind*:

$$\overset{\circ}{V} = E \times A \times v \quad m^3/s$$

(i) *Volume flow due to temperature difference*:

$$\overset{\circ}{V} = kA\sqrt{h(\Delta t)} \ m^3/s$$

(j) *Air changes per hour* (f):

$$f = \frac{\overset{\circ}{V} \times 3\,600}{V} \ changes/hour$$

Copyright reserved

(k) $Volume\ air\ flow\ per\ m^2\ opening$:

$$\dot{V} = \frac{\dot{V}}{A} \quad m^3/s/m^2$$

(l) $Free\ area\ of\ an\ opening\ (A)$:

$$A = total\ area \times \eta\ m^2$$

(m) $Louvre\ size\ for\ given\ air\ speed$:

$$= \frac{\dot{V} \times 100}{Number\ of\ inlets \times inlet\ speed \times \%\ A}\ m^2$$

18. $Fans$:

(a) $Fan\ total\ pressure\ (Pt)$

$$Pt = Ps + Pv \ \ kPa$$

(b) $Theoretical\ power\ of\ the\ fan$:

$$= \dot{V} \times Pt \ \ kW$$

(c) *True power of the fan:*

$$= \frac{\dot{V} \times Pt}{\eta}\ kW$$

(d) $Air\ power\ (Ap)$

$$Ap = \frac{\dot{Q} \times Pt}{N}\ \ kW$$

(e) $Brake\ power\ (Bp)$

$$Bp = \frac{\dot{Q} \times pt}{\eta\ t} = \frac{\dot{Q} \times ps}{\eta\ t}$$

$$\therefore Bp = \frac{Pt}{\eta\ t} = \frac{Ps}{\eta\ s} \quad (for\ the\ same\ volume)$$

19. *Fan laws:*

(a) $$\frac{VOL_1}{VOL_2} = \frac{N_1}{N_2} \times \frac{(DIA_1)^3}{(DIA_2)^3}$$

(b) $$\frac{P_1}{P_2} = \frac{(N_1)^2}{(N_2)^2} \times \frac{(DIA_1)^2}{(DIA_2)^2} \times \frac{\rho_1}{\rho_2}$$

(c) $$\frac{kW_1}{kW_2} = \frac{(N_1)^3}{(N_2)^3} \times \frac{(DIA_1)^5}{(DIA_2)^5} \times \frac{\rho_1}{\rho_2}$$

$$\frac{DIA_1}{DIA_2} = \frac{N_1}{N_2}$$

Copyright reserved