higher education & training

Department:
Higher Education and Training
REPUBLIC OF SOUTH AFRICA

MARKING GUIDELINE

NATIONAL CERTIFICATE

RADIO AND TELEVISION THEORY N3

5 AUGUST 2019

This marking guideline consists of 6 pages.

Copyright reserved

QUESTION 1

1.1
- Saturation: This is the amount of colour. ✓ It indicates the concentration or degree of purity of colour. ✓ It is a measure of the absence of white in a colour. ✓
- Hue: It defines colour, ✓ being the colour itself. ✓ Examples are red, blue, green, and magenta. ✓
- Luminance: This is the information of the intensity or brightness ✓of a scene. This signal is obtained in a colour picture by adding proportions ✓ of red, green and blue. ✓ (3 × 3) (9)

1.2 Magenta is 0,41 V. (1)
[10]

QUESTION 2

2.1 K
2.2 E
2.3 J
2.4 H
2.5 B
2.6 G
2.7 D
2.8 C
2.9 F
2.10 A

(10 × 1) **[10]**

QUESTION 3

3.1 It removes the 4, 43 MHz chrominance signal ✓ from the luminance path so the chrominance signal from the luminance does not interfere on the luminance of the picture. ✓ The chrominance decoder controls the notch filter or activates the notch filter ✓ when decoding PAL colour signals. During black and white reception the notch filter is inactive. ✓ (4)

3.2 It is deactivated by the swing burst gate that identifies the presence of the swinging colour burst of a PAL colour signal. ✓ The activated colour killer will switch off the chrominance amplifier and output of the chrominance circuits. ✓ A better looking black-and-white picture will then be seen without cross-colour effects. ✓ (3)
[7]

Copyright reserved

QUESTION 4

4.1 Subtractive
4.2 Photoconductive
4.3 The same
4.4 Interlaced
4.5 15 625 Hz

(5 × 1) **[5]**

QUESTION 5

5.1 False
5.2 False
5.3 False
5.4 False
5.5 True

(5 × 1) **[5]**

Copyright reserved

QUESTION 6

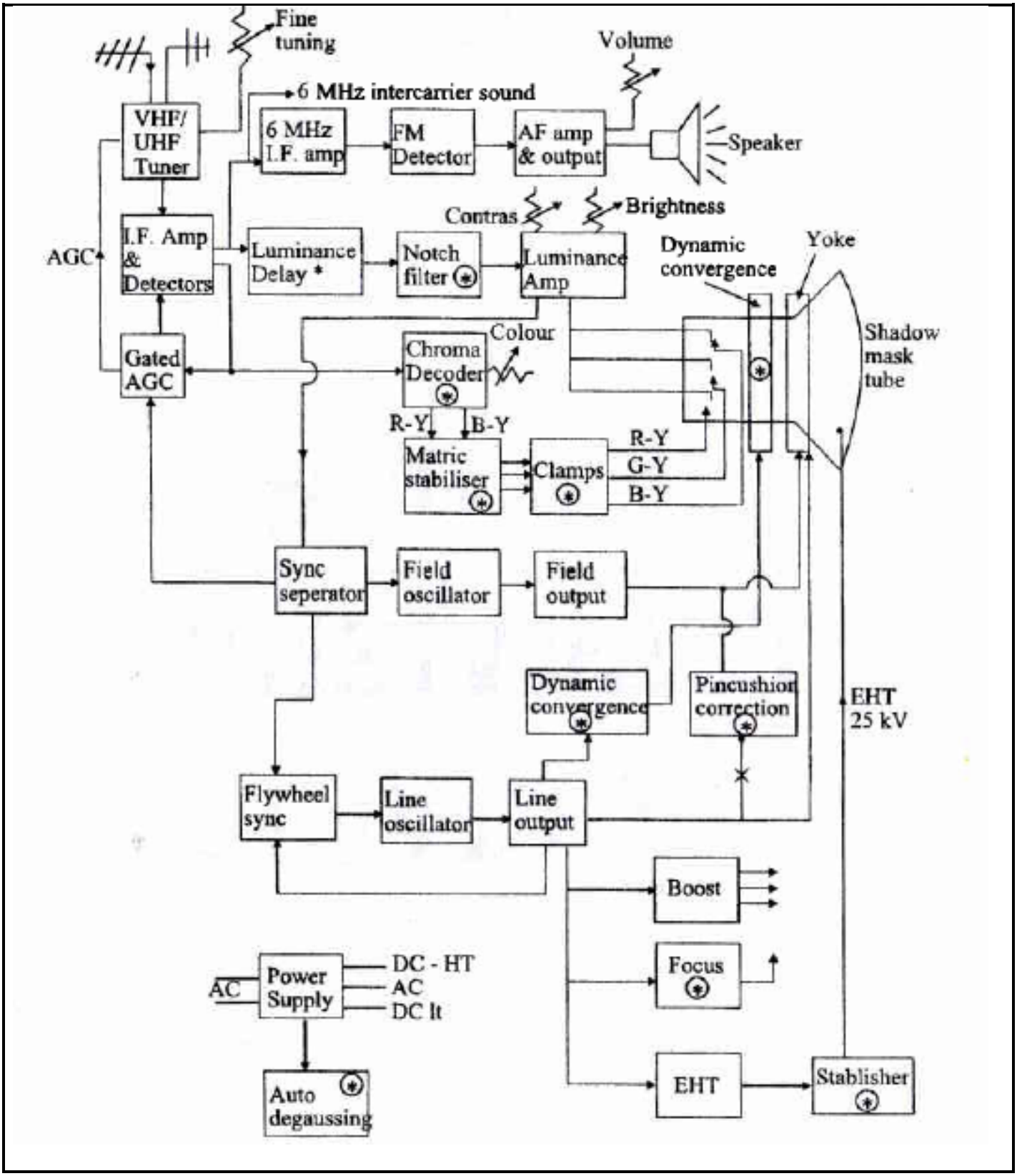

✓½ for each component and description and if all is there give full marks **[20]**

QUESTION 7

7.1
- A transformer with several secondary windings and diodes can be used to charge the interlayer capacitance. ✓ This method is known as 'the diode split-line output transformer'. ✓
- A transformer with a ± 8 kilovolt secondary winding can be used to drive a tripler ✓ which will produce the ±28 kV EHT. ✓ (4)

7.2

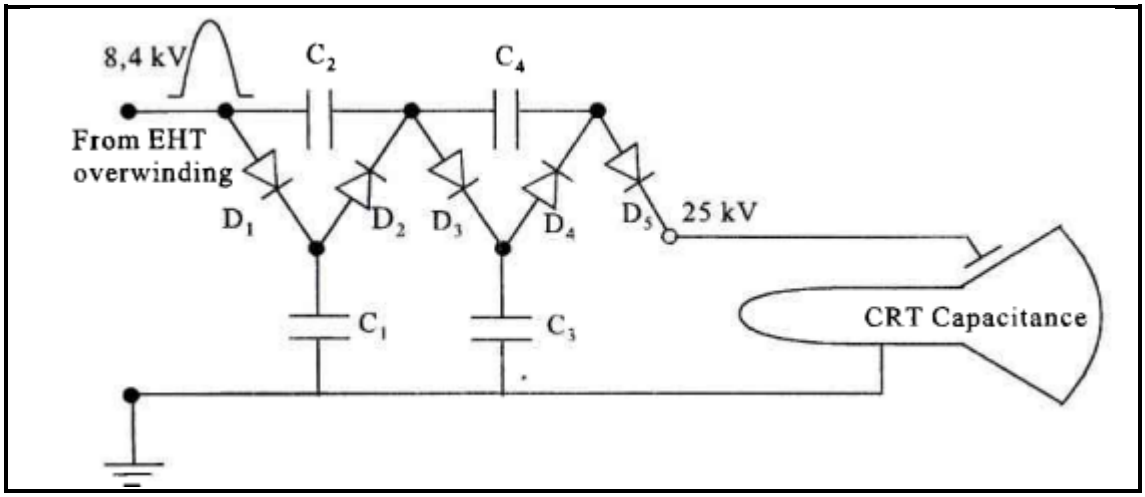

(8)

✓½ for each component and description and if all is there give full marks **[12]**

QUESTION 8

8.1 8.1.1

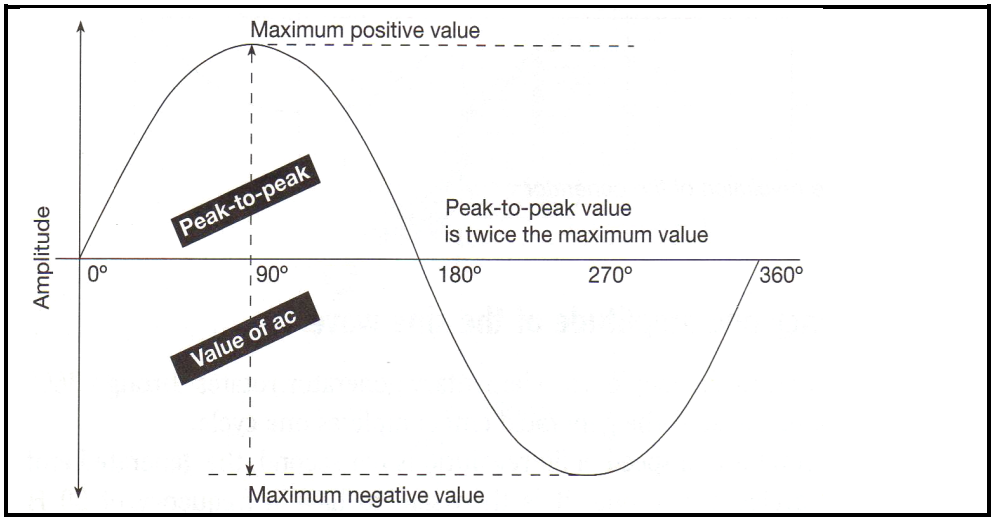

8.1.2

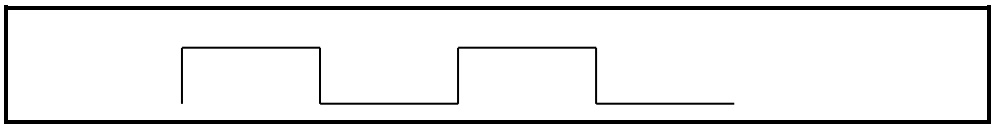

8.1.3

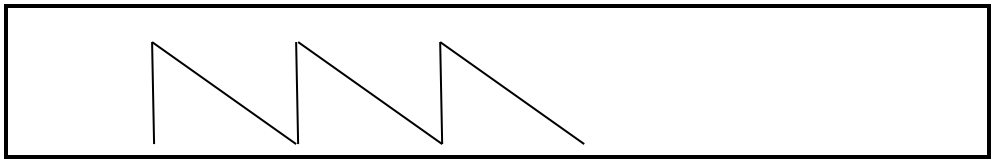

(3 × 2) (6)

8.2 8.2.1 In polarisation the electric field of an aerial is parallel to the length of the aerial ✓ and the magnetic field is at a right angle to it. ✓

8.2.2 A ground wave travels from the transmitting aerial to earth. ✓ It follows the curvature of the earth. ✓

8.2.3 A direct wave travels directly in an almost straight line ✓ from the transmitter to the receiver. ✓

(3 × 2) (6)
[12]

QUESTION 9

9.1
- Frequency
- DC voltage
- AC voltage
- Time period of waves
- Phase differences (5)

9.2
- Heater
- Cathode
- Control grid
- 1st anode
- 2nd anode
- 3rd anode
- Final anode
- Convergence assembly
- Aquadag
- Phosphor screen (10)

[15]

QUESTION 10

10.1 An electron gun produces a beam of electrons ✓ which accelerates to a fluorescent screen that emits light. ✓

10.2 The control grid allows electrons to pass through to the anodes. ✓ The negative bias voltage at the control grid with respect to the cathode, ✓½ enables it to control the brightness of the video signal. ✓½

(2 × 2) **[4]**

TOTAL: 100

Copyright reserved