higher education & training

Department:
Higher Education and Training
REPUBLIC OF SOUTH AFRICA

MARKING GUIDELINE

NATIONAL CERTIFICATE

RADIO AND TELEVISION THEORY N3

14 April 2021

This marking guideline consists of 6 pages.

Copyright reserved

QUESTION 1

1.1 A
1.2 D
1.3 D
1.4 C
1.5 C

(5 × 1) **[5]**

QUESTION 2

2.1 True
2.2 True
2.3 True
2.4 True
2.5 True

(5 × 1) **[5]**

QUESTION 3

3.1 C
3.2 L
3.3 J
3.4 I
3.5 H
3.6 K
3.7 B
3.8 A
3.9 E
3.10 D

(10 × 1) **[10]**

QUESTION 4

4.1 4.1.1 Yellow = Red + Green
= 0,3 V ✓ + 0,59 V ✓
= 0,89 V ✓

4.1.2 Magenta = Red + Blue
= 0,3 V ✓ + 0,11 V ✓
= 0,41 V ✓

4.1.3 Cyan = Green + Blue
= 0,59 V ✓ + 0,11 V ✓
= 0,7 V ✓

(3 × 3) (9)

4.2 White = 1 V ✓ (1)
[10]

QUESTION 5

5.1 To maintain relatively constant picture quality ✓ under varying reception conditions. ✓

5.2 To raise the voltage of signal from 1 V peak-to-peak to 150 V.✓ This is required to drive the cathode ray tube from black to peak white. ✓

5.3 Is used to select a signal ✓ received from the antenna. ✓

5.4 This circuits provides synchronising pulses ✓ to the line and field oscillators. ✓

5.5 The purpose of this circuit is to produce horizontal scanning of the screen✓ with an electron beam. ✓

(5 × 2) **[10]**

QUESTION 6

6.1 6.1.1 Luminance delay-line open circuit.
Instrument – oscilloscope (2)

6.1.2 Notch filter
Instrument – signal generator (2)

6.1.3 EHT stabiliser
Instrument – EHT probe (2)

6.2
- Provide adequate and linear horizontal deflection
- Provide E.H.T
- Develop boost rail voltages for the cathode ray tube (3)

[9]

QUESTION 7

7.1 Removes the 4,43 MHz chrominance signal from the luminance path ✓ so the chrominance signal from the luminance does not interfere on the luminance of the picture. ✓ The chrominance decoder controls the notch filter or activates the notch filter when decoding PAL colour signals. ✓ During black and white reception, the notch filter is inactive. ✓ (4)

Copyright reserved

7.2

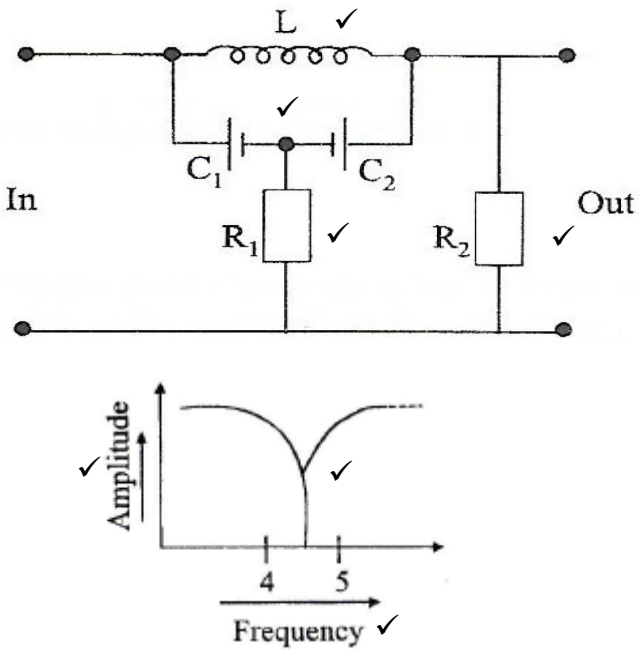

(7)
[11]

QUESTION 8

8.1
- Will the antenna be used for transmitting and or reception?
- Must the antenna receive VHF and/or UHF?
- What is the required bandwidth?
- Must the installation be inside or outside?
- How strong is the signal(s)?
- Impedance of receiver and transmission line?
- Is it a noisy signal environment?
- Must the antenna be directional?
- Budget available? (Any 5 × 1) (5)

8.2

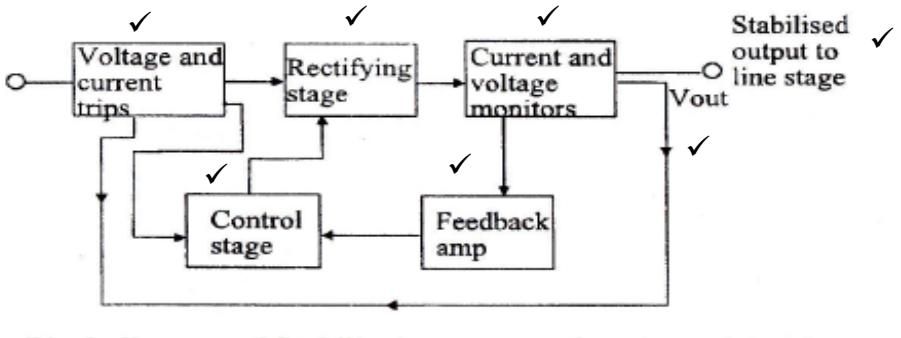

(7)
[12]

QUESTION 9

9.1

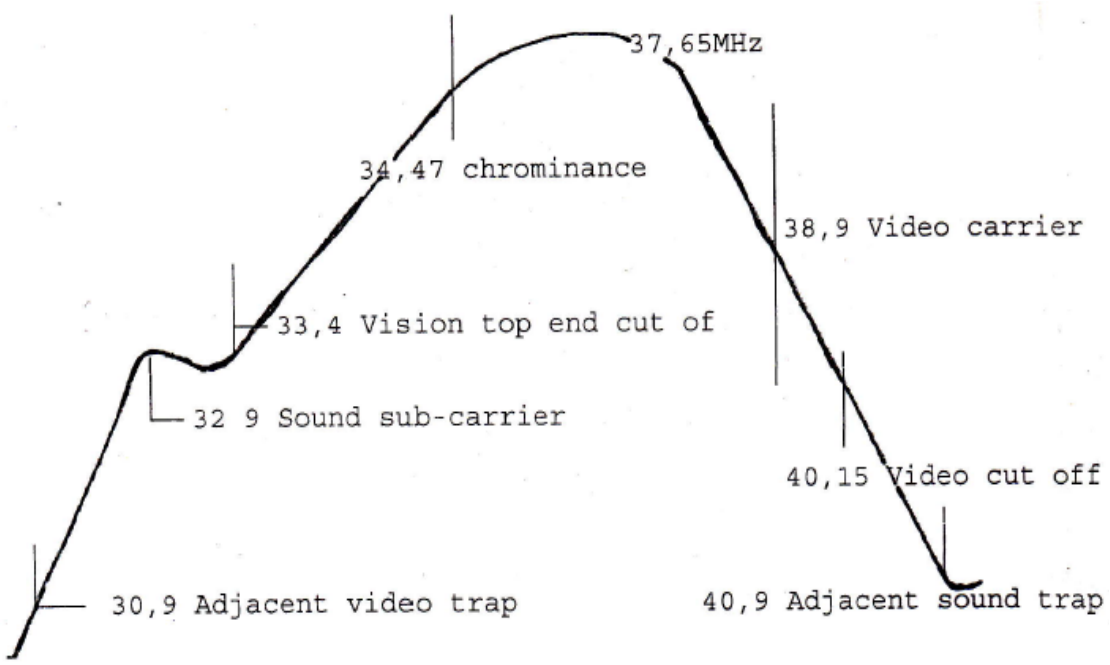

(1 mark per correct labelled frequency number) (8 × 1) (8)

9.2
- Luminance IF of 38,9 MHz
- Chrominance IF of 34,47 MHz
- Sound IF of 32,9 MHz

(3)
[11]

QUESTION 10

10.1
- EHT probe
- Signal generator
- Sweep generator
- Colour bar generator
- Cross hatch generator
- Multimeter

(Any 5 × 1) (5)

10.2 By intermixing the line ✓ and field scan waveforms. ✓ (2)
[7]

QUESTION 11

11.1

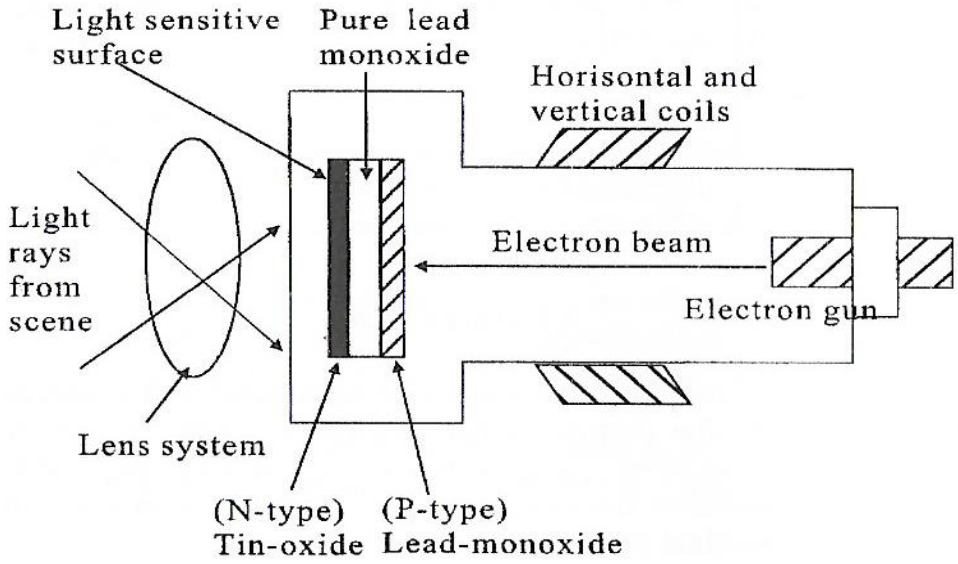

(Any 8 correct labels) (8×1) (8)

11.2
- Synchronisation during weak signal reception.
- For sync accuracy of the line section. (2)

[10]

TOTAL: 100

Copyright reserved