higher education & training

Department:
Higher Education and Training
REPUBLIC OF SOUTH AFRICA

MARKING GUIDELINE

NATIONAL CERTIFICATE

RADIO AND TELEVISION THEORY N3

5 APRIL 2018

This marking guideline consists of 6 pages.

Copyright reserved

QUESTION 1

1.1

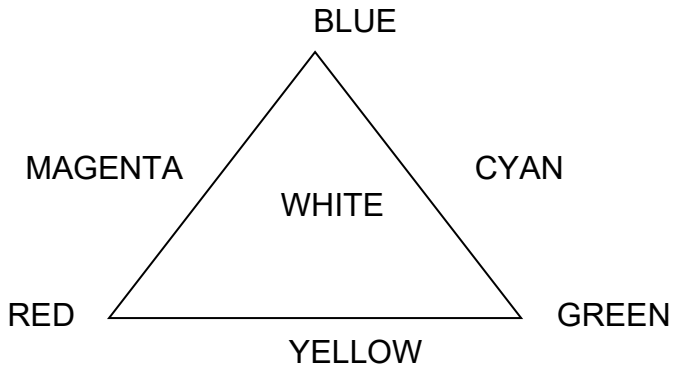

ONE mark each (7)

1.2 Ey = $\underline{O,3}$ Er + $\underline{0,59}$ Eg + $\underline{0,11}$ Eb

ONE mark each (3)
[10]

QUESTION 2

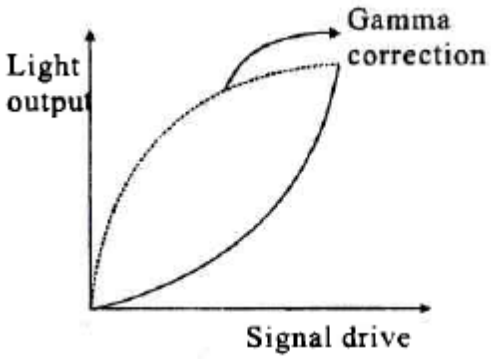

ONE mark for each label, TWO marks for correct drawing **[5]**

QUESTION 3

3.1 Light-sensitive face plate of the camera tube. It must be protected by means of a dark cover surrounding it.

3.2 Electrons emitted from the surface of the photocathode when it is bombarded by accelerated electrons

3.3 Behind the light-sensitive tube face decelerating the electron beam so that the beam strikes the tube face perpendicular

3.4 Flowing from the target ring representing the picture information changed from an optical image to an electrical signal by the photo-electrical action of the camera tube

3.5 Ratio of picture width to picture height in a camera and television

3.6 Flat transparent optical window made of glass coated on the inside with a conductive material

(6 × 2) **[12]**

QUESTION 4

4.1 Static convergence prevents the outlines of objects from appearing with coloured fringes particularly on monochrome programmes, because the colour circle arc does not follow the screen curvature.✓✓ The deflection centre of the colour beam (deflection angle) is not the same as the centre curvature of the screen and the 3 guns does not occupy one position – this makes dynamic and static convergence necessary.✓✓✓ (5)

4.2

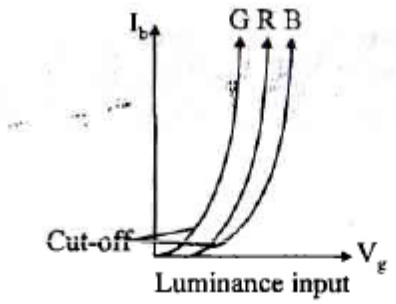

ONE mark for each label (5)
[10]

QUESTION 5

5.1
- A transformer with several secondary windings and diodes can be used to charge the interlayer capacitance. This method is known as the diode split line output transformer.
- The second method is to use a transformer with a ± 8 kilovolt secondary winding to drive a tripler which will produce the ± 25 kv EHT. (2 × 2) (4)

5.2

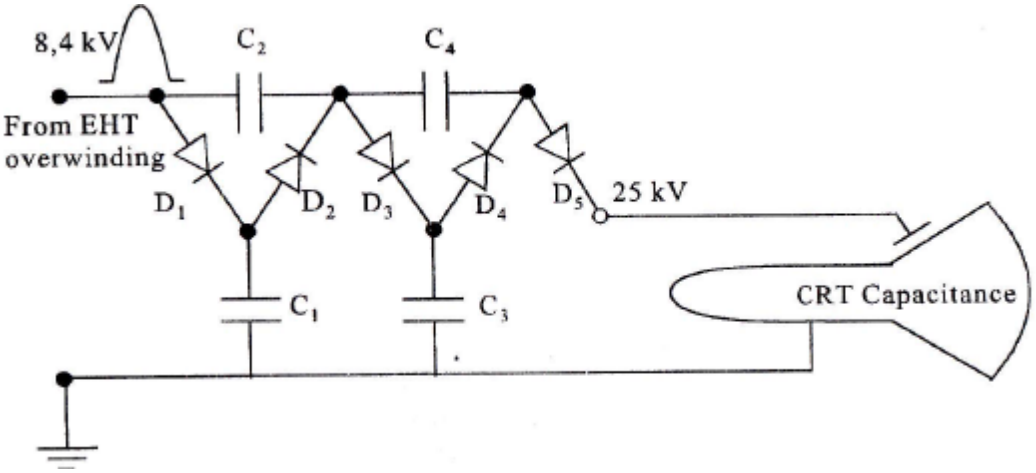

6 marks for diodes and capacitors and 2 marks for showing input and output (8)
[12]

QUESTION 6

- Will the antenna be used for transmitting and/or reception?
- Must the antenna receive VHF and/or UHF?
- Required band width
- Inside or outside installation
- Strength of signal
- Impedance of receiver and transmission line
- Noise of signal environment
- Must the antenna be directional?
- Budget available

ONE mark each. **[9]**

QUESTION 7

7.1 A 1 volt composite video signal is applied to the chrominance and burst amplifiers. The chrominance amplifier extracts the chrominance 4, 43 MHz signal and amplifies it.✓ The burst gate identifies the colour burst as a PAL colour burst signal and allows the chrominance signal through.✓ The burst phase corrects the 4, 43 MHz built-in reference oscillator.✓ The PAL switch is activated by the line pulses and switches the phase of R-Y demodulator through 180 degrees on the alternative lines in sync with the PAL signal.✓ The reference oscillator signal demodulates the R-Y and B-Y chrominance signal in the V and U demodulators by comparing the phase of the reference oscillators with the chrominance signal. The difference is the R-Y and B-Y outputs.✓ (5)

7.2 The notch filter removes the 4, 43 MHz chrominance signal from the luminance path so the chrominance signal from the luminance does not interfere with the luminance of the picture✓. The chrominance decoder controls the notch filter or activates the notch filter when decoding PAL colour signals✓. During black and white reception the notch filter is inactive✓. (3)

7.3 The colour killer is deactivated by the swing burst gates that identify the presence of the swinging colour burst of a PAL colour signal✓. The activated colour killer switches off the chrominance amplifier and output of the chrominance circuits✓. A better-looking black and white picture will then be seen without cross-colour effects✓. (3)

[11]

QUESTION 8

- Signal generator –used for tuning of the tuner, IF and other traps and circuits
- Oscilloscope – displays waveforms, measures DC and AC voltages, frequency range
- Sweep generator – an RF generator that can sweep over several frequencies and is used for alignment of the RF and IF stages
- Colour bar generator – used for colour checks or adjustments
- Cross hatch generator – gives signal used for convergence, pincushion and linearity adjustments
- Degaussing coil – used to demagnetise the screen of unwanted magnetic fields
- EHT probe – used for checking extra high tension voltages
- Multimeter – used for measuring various voltages, currents and resistances (6 × 2) **[12]**

Copyright reserved

QUESTION 9

9.1 Demagnetising of the tube refers to degaussing. As the tube is made up of steel nearby magnetic objects can cause it to become magnetised. ✓ If the shadow mask is magnetised, colour purity will become patchy. ✓ (2)

9.2
- Manual degaussing
- Automatic degaussing (2)

9.3

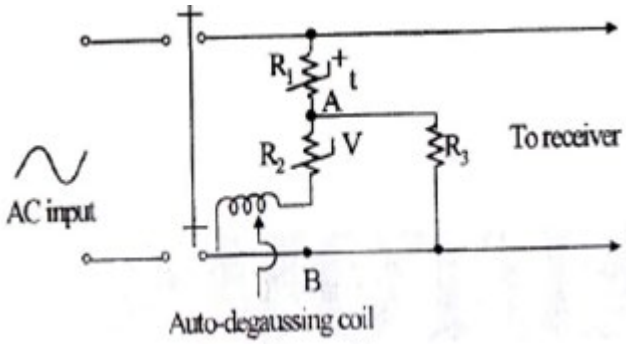

ONE mark for each component (6)

9.4
- Indicator
- Alphanumeric display (2)

[12]

QUESTION 10

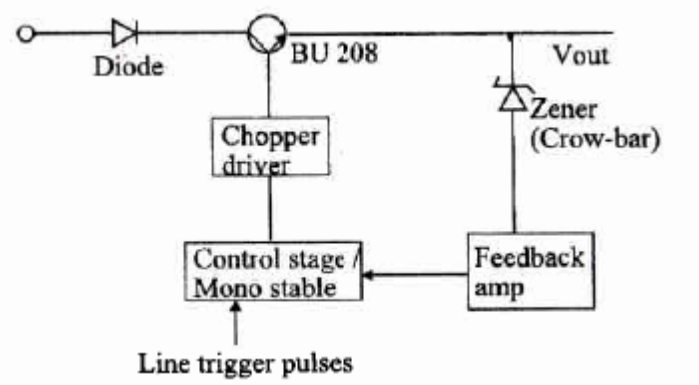

ONE mark for each label **[7]**

TOTAL: 100

Copyright reserved