higher education & training

Department:
Higher Education and Training
REPUBLIC OF SOUTH AFRICA

MARKING GUIDELINE

NATIONAL CERTIFICATE

NOVEMBER EXAMINATION

RADIO AND TELEVISION THEORY N2

12 NOVEMBER 2014

This marking guideline consists of 7 pages.

Copyright reserved

QUESTION 1

1.1

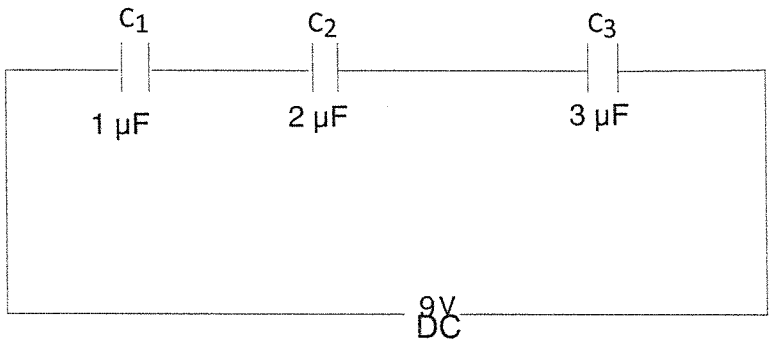

(4)

1.2 $C_T = \frac{1}{C_1} + \frac{1}{C_2} + \frac{1}{C_3}$

$= \frac{1}{1} + \frac{1}{2} + \frac{1}{3}$

$= \frac{6+3+2}{6}$

$= 0.545\mu F$

(3)

1.3 $Q = C \times V$

$= 0.545 \times 9$

$= 4.905\ \mu C$

(2)

1.4 $V_{C1} = \frac{Q}{C_1}$

$= \frac{4.905}{1}$

$= 4.905\ V$

$V_{C2} = \frac{Q}{C_2}$

$= \frac{4.905}{2}$

$= 2.452\ V$

$V_{C3} = \frac{Q}{C_3}$

$= \frac{4.905}{1}$

$= 1.635\ V$

(6)

1.5 It is a parallel resonant circuit where the current flow is at minimum and the impedance is at maximum. (2)

[17]

Copyright reserved

QUESTION 2

2.1 The time required to charge the capacitor to 63,2% of the maximum applied voltage or the time it takes to discharge the capacitor to 62,8% of the maximum applied voltage. (3)

2.2 Five times the time constant (1)

2.3 2.3.1 $\tau = R \times C$

$= 100 \times 10^3 \times 0.01 \times 10^{-6}$

$= \mathbf{0.001\,S}$ (2)

2.3.2 $V_C = V\left(1 - e^{\frac{-t}{RC}}\right)$

$= 9\left(1 - e^{\frac{-0.002}{0.001}}\right)$

$= 9\left(1 - e^{-2}\right)$

$= 9\,(1 - 0.1353)$

$= 9\,(0.8647)$

$= \mathbf{7.7823\,V}$ (5)

2.3.3 $V_R = V - V_C$

$= 9 - 7.7823$

$= \mathbf{1.2177\,V}$ (2)

2.3.4 $i = \frac{V}{R}\, e^{\frac{-t}{RC}}$

$= \frac{9}{100 \times 10^3} \times e^{\frac{-0.001}{0.001}}$

$= 0.00009 \times e^{-1}$

$= \mathbf{33.109\,\mu A}$ (3)

2.3.5 $i = \frac{V}{R}\, e^{\frac{-t}{RC}}$

$= \frac{9}{100 \times 10^3} \times e^{\frac{-0.002}{0.001}}$

$= 0.00009 \times e^{-2}$

$= \mathbf{12.18\,\mu A}$ (3)

[19]

Copyright reserved

QUESTION 3

3.1 3.2.1

$$fr = \frac{1}{2\pi\sqrt{LC}}$$

$$= \frac{1}{2\pi\sqrt{50 \times 10^{-6} \times 40 \times 10^{-6}}}$$

$$= 3558.8\ Hz$$ (2)

3.2.2

$$X_C = \frac{1}{2\pi fc}$$

$$= \frac{1}{2\pi \times 3558.8 \times 40^{-6}}$$

$$= 1.118\ \Omega$$ (2)

3.2.3

$$X_L = 2\pi fl$$

$$= 2\pi \times 3558.8 \times 50 \times 10^{-6}$$

$$= 1.118\ \Omega$$ (2)

3.2.4

$$Z = \sqrt{R^2 + (X_L - X_C)^2}$$

$$= \sqrt{7.5^2 + (1.118 - 1.118)^2}$$

$$= 7.5\ \Omega$$ (2)

3.2.5

$$I = \frac{V}{Z}$$

$$= \frac{50}{7.5}$$

$$= 6.666\ A$$ (2)

3.2.6

$$V_R = I \times R$$
$$= 6.666 \times 7.5$$
$$= 49.995\ V$$

$$V_L = I \times X_C$$
$$= 6.666 \times 1.118$$
$$= 7.452\ V$$

$$V_C = I \times X_C$$
$$= 6.666 \times 1.118$$
$$= 7.452\ V$$ (6)

Copyright reserved

3.2.7 Power factor $= Cos\,\theta$

$= \frac{R}{Z}$

$= \frac{7.5}{7.5}$

$= 1$ (2)

3.2.8 $\theta = Cos^{-1}\frac{R}{Z}$

$= \frac{7.5}{7.5}$

$= 0^{\circ}$ (2)

[20]

QUESTION 4

4.1

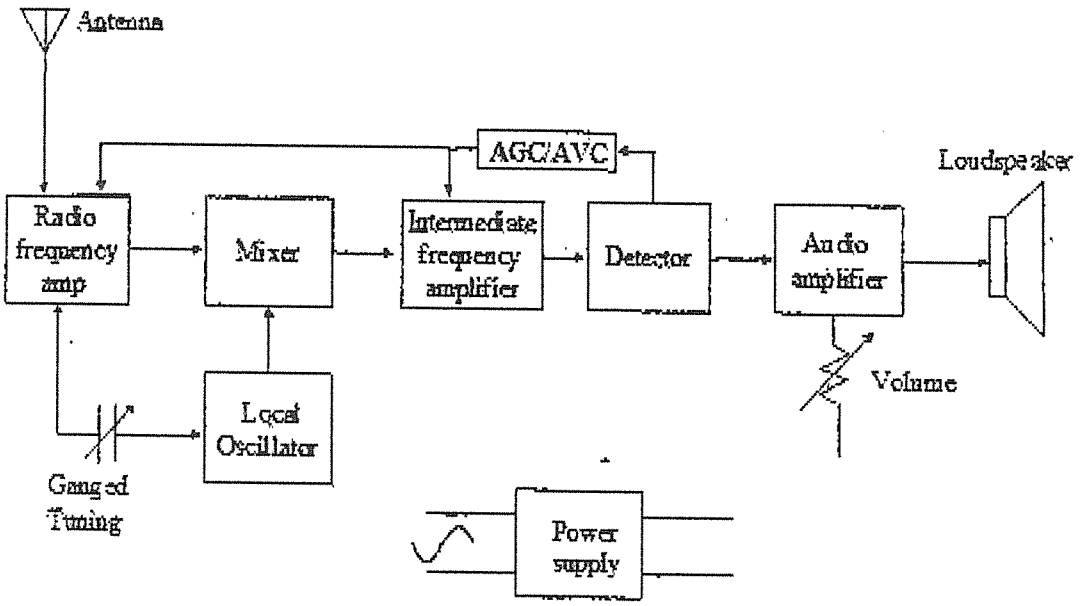

(10)

4.1.1 Superheterodyne is a process where **two frequencies <u>oscillate together</u>,** producing **the sum** and **the difference** of the two frequencies. (4)

4.1.2 AVC circuit control the gain of the IF and RF amplifiers. It prevents drift. (3)

[17]

QUESTION 5

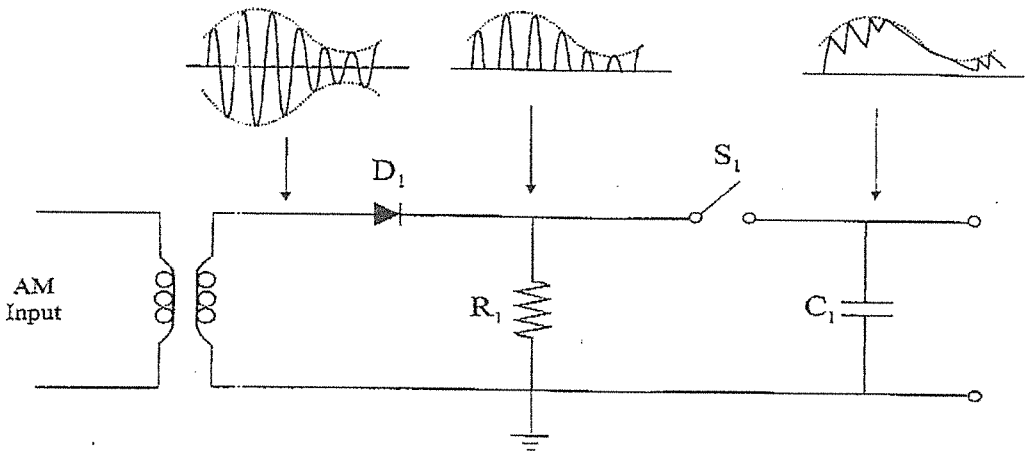

[6]

QUESTION 6

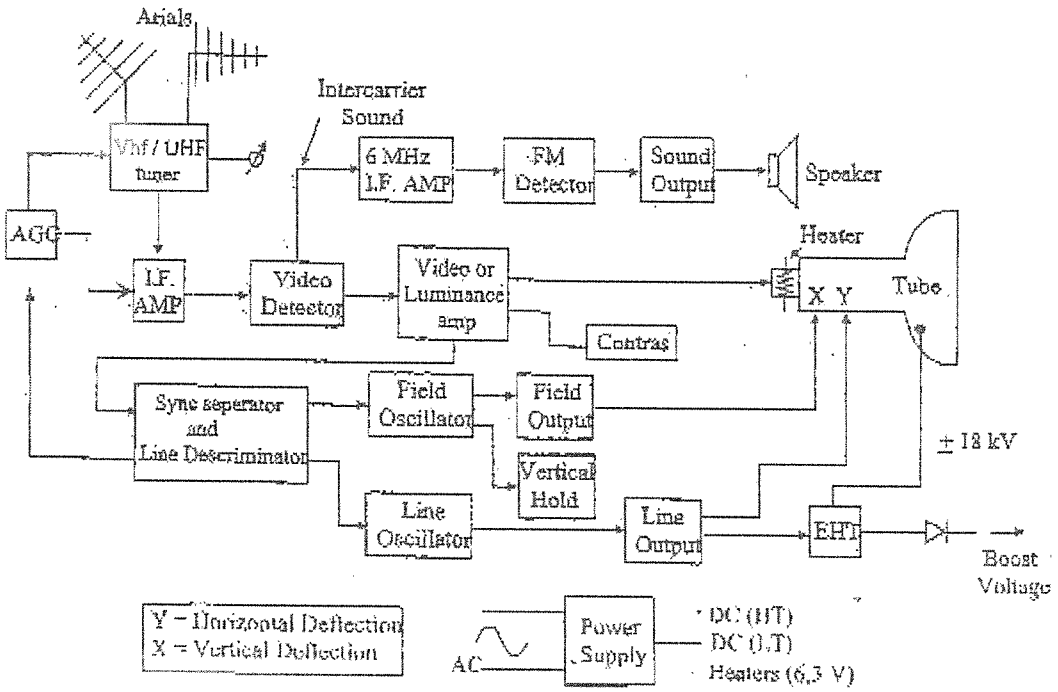

[15]

QUESTION 7

7.1 Sound and video signals are separated at this stage. The sound carrier is send to the FM detector and the video signal to the video amplifier. (4)

7.2 To maintain a relatively constant picture under varying reception conditions. (2)
[6]

TOTAL: 100

Copyright reserved