higher education & training

Department:
Higher Education and Training
REPUBLIC OF SOUTH AFRICA

MARKING GUIDELINE

NATIONAL CERTIFICATE

APRIL EXAMINATION

RADIO AND TELEVISION THEORY N2

25 MARCH 2014

This marking guideline consists of 6 pages.

Copyright reserved

QUESTION 1

1.1 1.1.1 (4)

1.1.2 $R_T = R_1 + R_2 + R_3$
$= 15 + 10 + 15$
$= 40\ \Omega$ (2)

1.1.3 $I = \frac{V}{R}$

$= \frac{100}{40}$

$= 2.5\ A$ (2)

1.1.4 $V_{R1} = I \times R_1$
$= 2{,}5 \times 15$
$= 37{,}5\ V\surd$

$V_{R2} = I \times R_2$
$= 2{,}5 \times 10$
$= 2{,}5\ v\surd$

$V_{R3} = I \times R_3$
$= 2{,}5 \times 15$
$= 37{,}5\ V\surd$ (2 x 3) (6)

1.2
- Block DC
- pass AC
- store a charge.

(3)

1.3
- Paper dielectric
- Ceramic
- silver mica
- polyester film
- polyester
- poly carbonate

(Any 3 x 1) (3)
[20]

Copyright reserved

QUESTION 2

2.1 2.1.1 $\tau = R \times C$
$= 100 \times 10^3 \times 0{,}01 \times 10^{-6}$
$= 0{,}001$ s (3)

2.1.2 $Vc = V\left(1 - e^{\frac{-t}{RC}}\right)$

$= 9\left(1 - e^{\frac{0.002}{0.001}}\right)\surd$

$= 9\left(1 - e^{-2}\right)\surd$

$= 9\left(1 - 0{,}01353\right)\surd$

$= 9\left(0{,}8647\right)\surd$

$= 7{,}7823$ V$\surd$ (5)

2.1.3 $V_R = V - V_C$
$= 9 - 7.7823$
$= 1{,}2177$ V (2)

2.1.4 $i = \frac{V}{R} e^{\frac{-t}{RC}}$

$= \frac{9}{100 \times 10^3} e^{\frac{-0.001}{0.001}}\surd$

$= 0{,}00009\ (e^{-1}$
$= 33{,}109\ \mu A\surd$ (2)

2.1.5 $i = \frac{V}{R} e^{\frac{-t}{RC}}$

$= \frac{9}{100 \times 10^3} e^{\frac{-0.002}{0.001}}\surd$

$= 0{,}00009\ (e^{-2})$
$= 12{,}180\ \mu A.)\surd$ (2)
[14]

QUESTION 3

3.1 $X_L = 2.\pi.F.L$
$= 2 \times 3{,}142 \times 100 \times 25^{-3}$
$= 15{,}707\ \Omega$ (2)

3.2 $X_C = \frac{1}{2.\pi.F.c}$
$= \frac{1}{2 \times 3.142 \times 100 \times 47 \times 10^{-6}}$
$= 33{,}862\ \Omega$ (2)

Copyright reserved

3.3 $Z = \sqrt{R^2 + (X_C - X_L)^2}$
$Z = \sqrt{100^2 + (33.862 - 15.707)^2}$
$= 101{,}634\ \Omega$ (2)

3.4 $I = \frac{V}{Z}$
$= \frac{120}{101.634}$
$= 1{,}180\ A$ (2)

3.5 $\Theta = Cos^{-1}\frac{R}{Z}$
$= \frac{100}{101.634}$
$= 0{,}98$
$= 10{,}287°$ (2)

3.6 $V_R = I \times R$
$= 1{,}180 \times 15{,}707$
$= 18{,}534\ V$

$V_L = I \times X_L$
$= 1{,}180 \times 100$
$= 118\ V$

$V_C = I \times X_C$
$= 1{,}180 \times 33{,}862$
$= 39{,}957\ V$ (6)
[16]

QUESTION 4

4.1

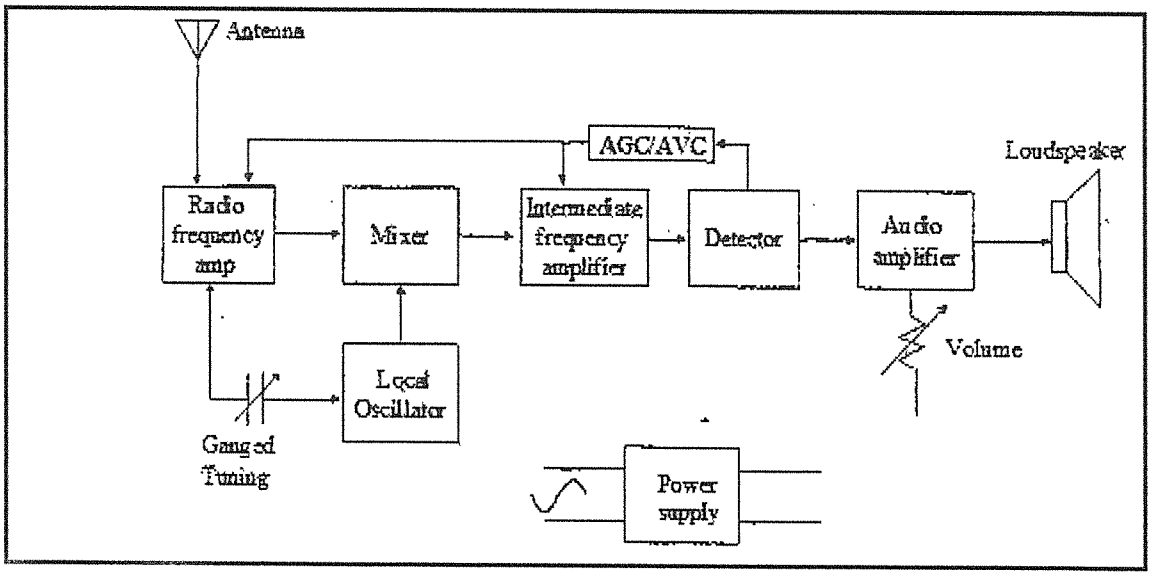

[10]

QUESTION 5

5.1 5.1.1 The total resistance of an AC circuit that contains resistance and the reactive component(s).

5.1.2 Amplitude modulation is a process by which the modulating carrier wave is made to vary in accordance with the instantaneous modulating signal.

5.1.3 Superheterodyne is a process by which two frequencies oscillate together, producing the sum and the difference of the two frequencies.

5.1.4 Frequency, DC voltage, AC voltage, timeperiod, phasediffetences

(3 x 4 (12)

5.2 Velocity = $3 \times 10^8\ kHz$
Frequency = $500 \times 10^3\ Hz$

$\lambda = \frac{V}{F}$

$= \frac{3 \times 10^8}{500 \times 10^3}$

= 600 m

With a frequency of 1 600 kHz

$\lambda = \frac{V}{F}$

$= \frac{3 \times 10^8}{1600 \times 10^3}$

=187,5 m

The equivalent wavelength is 600 187,5 m

(6)
[18]

Copyright reserved

QUESTION 6

6.1

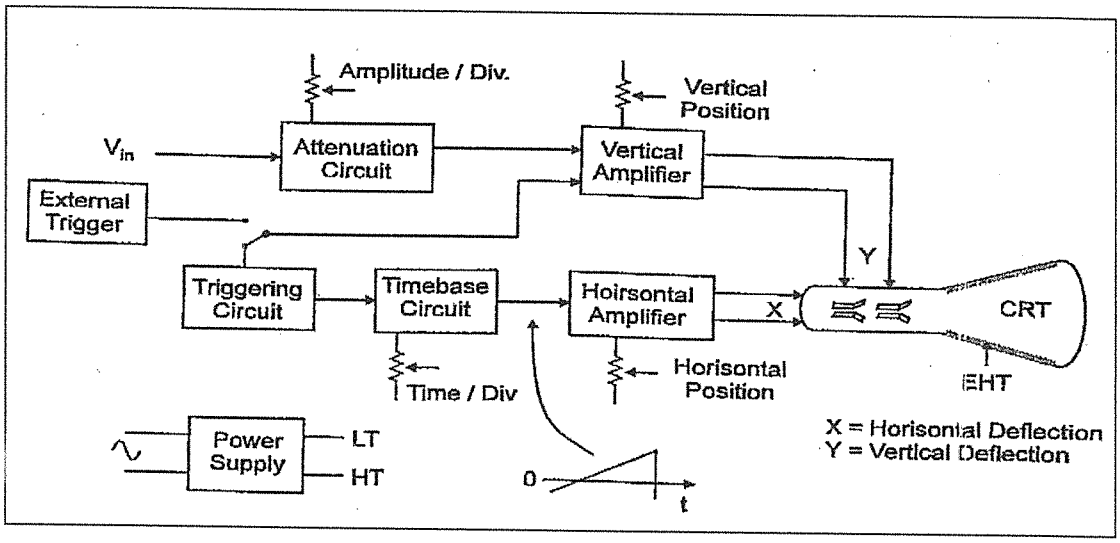

BLOCK DIAGRAM OF AN OSCILLOSCOPE (10)

6.2 Volt/division:- chooses vertical scale
Time/division:- chooses horizontal
Brightness:– makes the trace brighter or dimmer
X – shift: -y – shift – moves the trace left or right.
Y – shift – moves the trace up or down.
Focus – focus the trace (12)
[22]

TOTAL: 100

Copyright reserved