higher education & training

Department:
Higher Education and Training
REPUBLIC OF SOUTH AFRICA

MARKING GUIDELINE

NATIONAL CERTIFICATE

APRIL EXAMINATION

RADIO AND TELEVISION THEORY N2

27 MARCH 2013

This marking guideline consists of 6 pages.

Copyright reserved

QUESTION 1

1.1
- Blocks DC
- Passes AC
- Coupling
- Voltage smoothing
- Stores a charge

(Any 2 × 1) (2)

1.2 The dielectric material, size of the plates, the distance between the plates anc voltage across the plates (Any 3 × 1) (3)

1.3 The time required to charge the capacitor to 63,2% of the maximum applied voltage or the time it takes to discharge the capacitor to 36,8% of the maximum applied voltage (4)

1.4 1.4.1
$$Tc = R \times C$$
$$= 100 \times 10^{2} \times 0{,}01 \times 10^{-6}$$
$$= 0{,}001 \text{ sec}$$
(2)

1.4.2
$$Vc = V\left(1 - e\frac{-t}{RC}\right)$$
$$= 12\ (1 - e\ \frac{0{,}002}{0{,}001})$$
$$= 12\ (1 - e^{-2})$$
$$= 12\ (0{,}86467)$$
$$= 10{,}376 \text{ V}$$
(3)

1.4.3
$$V_R = V - V_C$$
$$= 12 - 10{,}376$$
$$= 1.624 \text{ V}$$
(2)

1.4.4
$$I = \frac{V}{R} e \frac{-t}{RC}$$
$$= \frac{12}{100 \times 10^{2}} e \frac{-0{,}001}{0{,}001}$$
$$= 0{,}00012\ (e^{-1})$$
$$= 0{,}00012 \times 0{,}367879441$$
$$= 0{,}000044145 \text{ A } (44\ \mu\text{A})$$
(3)

Copyright reserved

1.4.5 $$I = \frac{V}{R} e^{\frac{-t}{RC}}$$
$$= \frac{12}{100 \times 10^2} e^{\frac{-0,002}{0,001}}$$
$$= 0.00012 \left(e^{-2}\right)$$
$$= 0,00012 \times 0,13533$$
$$= 0,00001624 \text{ A } (16.24\mu A)$$

(3)
[22]

QUESTION 2

2.1

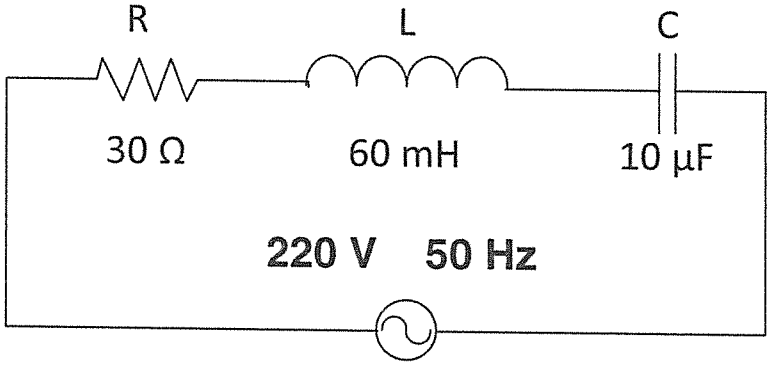

(4)

2.2 2.2.1 $$X_L = 2.\pi.F.L$$
$$= 2 \times 3,142 \times 50 \times 60^{-2}$$
$$= 18,852\ \Omega$$

(2)

2.2.2 $$X_C = \frac{1}{2..\pi.F.c.}$$
$$= \frac{1}{2 \times 3,142 \times 50 \times 10 \times 10^{-6}}$$
$$= 318,268\ \Omega$$

(2)

2.2.3 $$Z = \sqrt{R^2 + \left(X_C + X_L\right)^2}$$
$$= \sqrt{30^2 + \left(318,268 + 18,852\right)^2}$$
$$= 300,915\ \Omega$$

(2)

2.2.4 $$I = \frac{V}{Z}$$
$$= \frac{220}{300,915}$$
$$= 0,731 \text{ A}$$

(2)

Copyright reserved

2.2.5 $$\Theta = Cos^{-1}\frac{R}{Z}$$

$$\text{Cos}^{-2}\frac{R}{Z} = \frac{30}{300{,}915}$$

$$= 0{,}099$$

$$= 84{,}28^{\circ}$$

(2)

2.2.6 $V_R = I \times R$ $V_L = I \times X_L$ $V_C = I \times X_C$

$= 0{,}731 \times 30$ $= 0{,}731 \times 18{,}852$ $= 0{,}731 \times 318{,}268$

$= 21{,}93$ V $= 13{,}780$ V $= 232{,}653$ V (6)

[20]

QUESTION 3

3.1 $$\lambda = \frac{V}{F}$$

$$= \frac{340}{40\ \ 000}$$

= 0,0085 m (0,85 cm)

(2)

3.2 3.2.1 $$F = \frac{1}{t}$$

$$= \frac{1}{7 \times 10^{-6}}$$

= 142,857 kHz

(2)

3.2.2 $$\lambda = \frac{V}{F}$$

$$= \frac{300\,000\,000}{142{,}857}$$

= 210 m

(2)

[6]

Copyright reserved

QUESTION 4

4.1

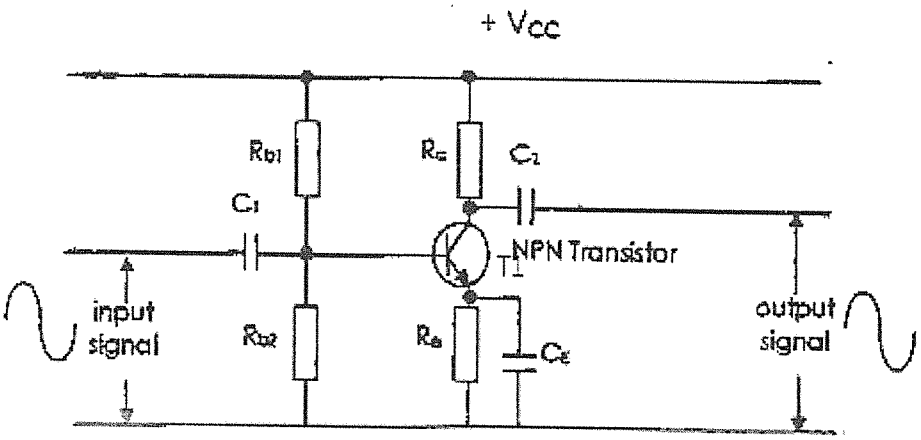

(10)

4.2
- High current gain
- High voltage gain
- High power gain
- Input impedance medium
- Output impedance medium
- 180° phase shift
- General application

(7)
[17]

QUESTION 5

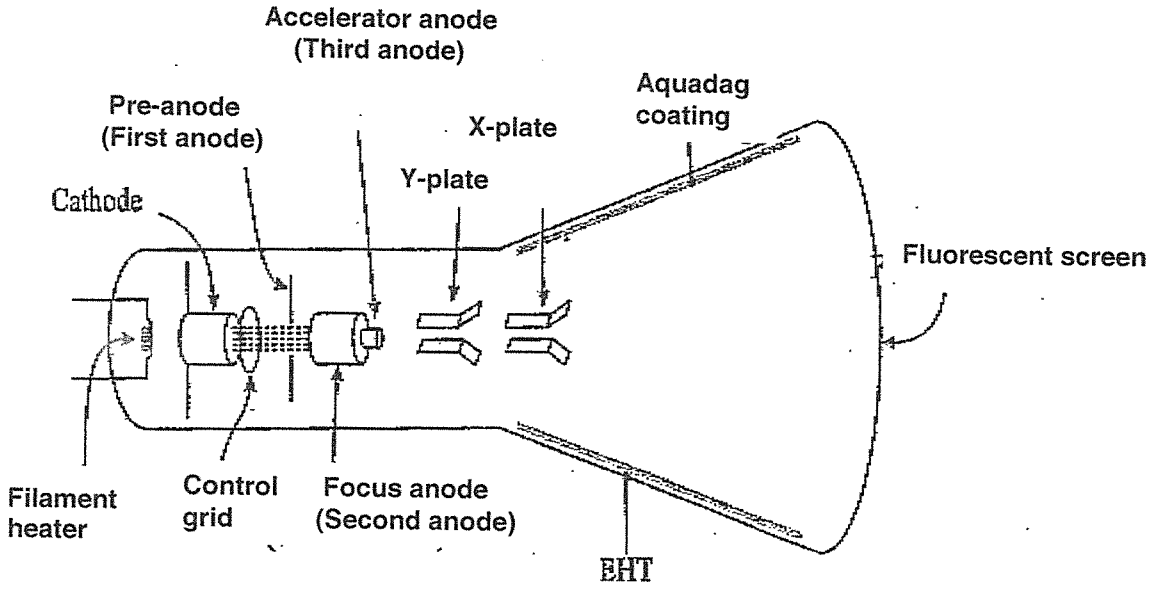

Y-plates = Vertical deflection
X-plates = Horizontal deflection

[10]

Copyright reserved

QUESTION 6

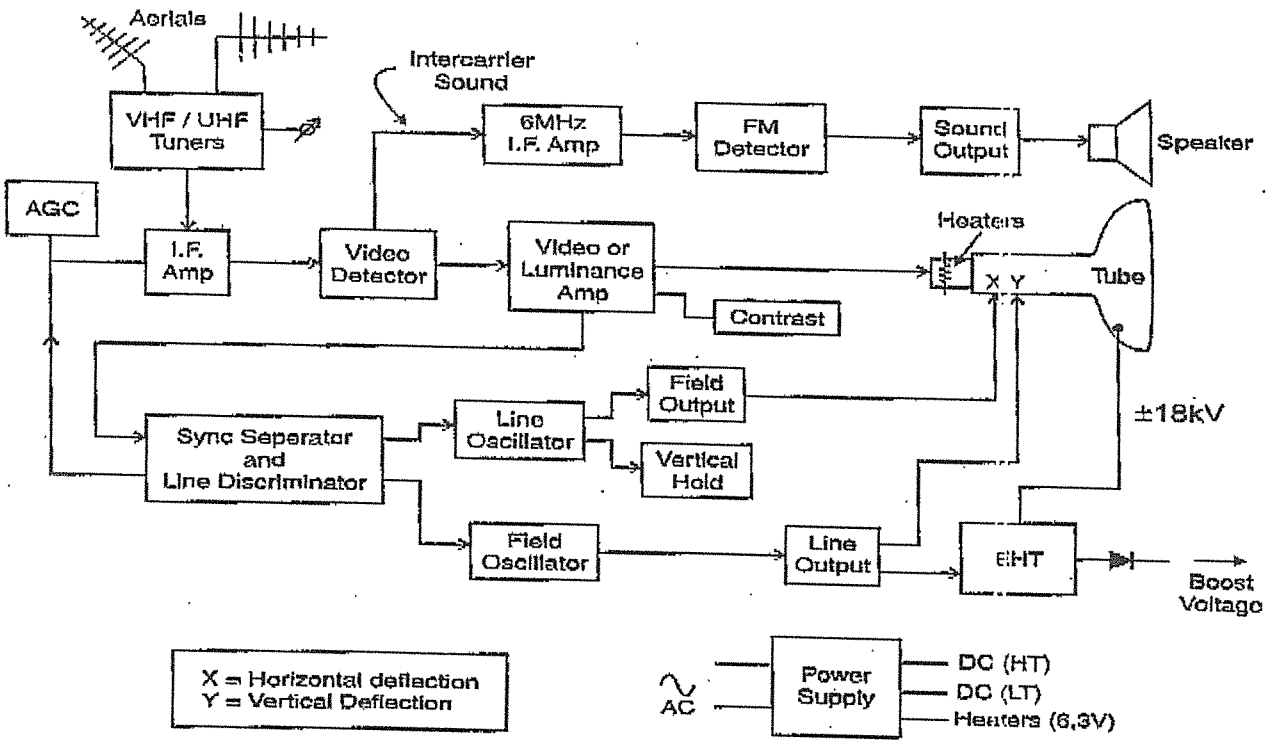

[15]

QUESTION 7

7.1 True

7.2 True

7.3 True

7.4 False

7.5 False

7.6 False

7.7 False

7.8 True

7.9 False

7.10 True

(10 × 1) **[10]**

TOTAL: 100

Copyright reserved