



higher education & training

Department:
Higher Education and Training
REPUBLIC OF SOUTH AFRICA

MARKING GUIDELINE

NATIONAL CERTIFICATE

JULY EXAMINATION

RADIO AND TELEVISION THEORY N2

22 JULY 2014

This marking guideline consists of 6 pages.

Copyright reserved

QUESTION 1

1.1

1.1.1 (a) polarised (b) non – polarised. (2)

1.1.2 (a) A C (b)D C. (2)

1.2 The time constant of a capacitor is the time required to charge the capacitor to 63.2% orf the maximum applied voltage or the time it takes to discharge the capacitor to 62.8% orf the maximum applied voltage. (3)

1.3.1 $\tau = R \times C$
$= 15 \times 10^{3} \times 2{,}35 \times 10^{-6}$
$= 0.03525$ s (3)

1.3.2 $Vc = V\left(1 - e^{\frac{-t}{RC}}\right)$

$= 15\left(1 - e^{\frac{-0.03525}{0.03525}}\right)$

$= 15\left(1 - e^{-1}\right)$

$= 15\ (0.632)$

$= 9{,}48$ V) (4)
[14]

QUESTION 2

2.1

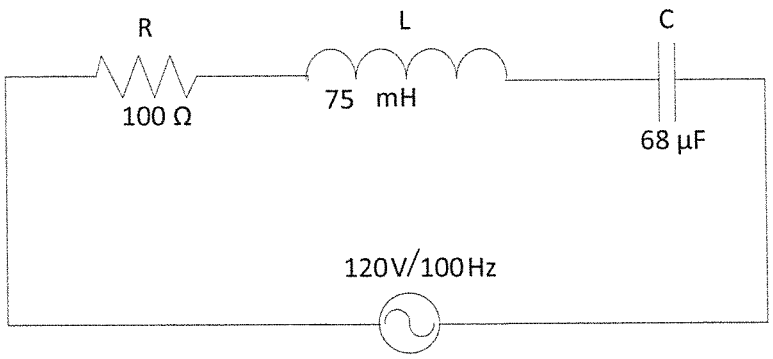

(4)

2.2 $X_L = 2.\pi.F.L$
$= 2 \times 3{,}142 \times 100 \times 75^{-3}$
$= 47.123\ \Omega$ (2)

Copyright reserved

2.3 $X_C = \frac{1}{2.\pi.F.c}$

$= \frac{1}{2 \times 3.142 \times 100 \times 68 \times 10^{-6}}$

$= 23.405\ \Omega$ (2)

2.4 $Z = \sqrt{R^2 + (X_C - X_L)^2}$

$Z = \sqrt{100^2 + (47.123 - 23.405)^2}$

$= 102.774\Omega$ (2)

2.5 $I = \frac{V}{Z}$

$= \frac{120}{102.774}$

$= 1.167$ A (2)

2.6 $\theta = Cos^{-1}\frac{R}{Z}$

$= \frac{100}{102.774}$

$= 13.342°$ (2)

2.7 $V_R = I \times R$

$= 1.167 \times 100$

$= 116.7$ V (2)

$V_L = I \times X_L$

$= 1.167 \times 47.123$

$= 54.992$ V (2)

$V_C = I \times X_C$

$= 1.167 \times 23.405$

$= 27.313$ V (2)

(6)

[20]

Copyright reserved

QUESTION 3

3.1 NPN/PNP (1)

3.2

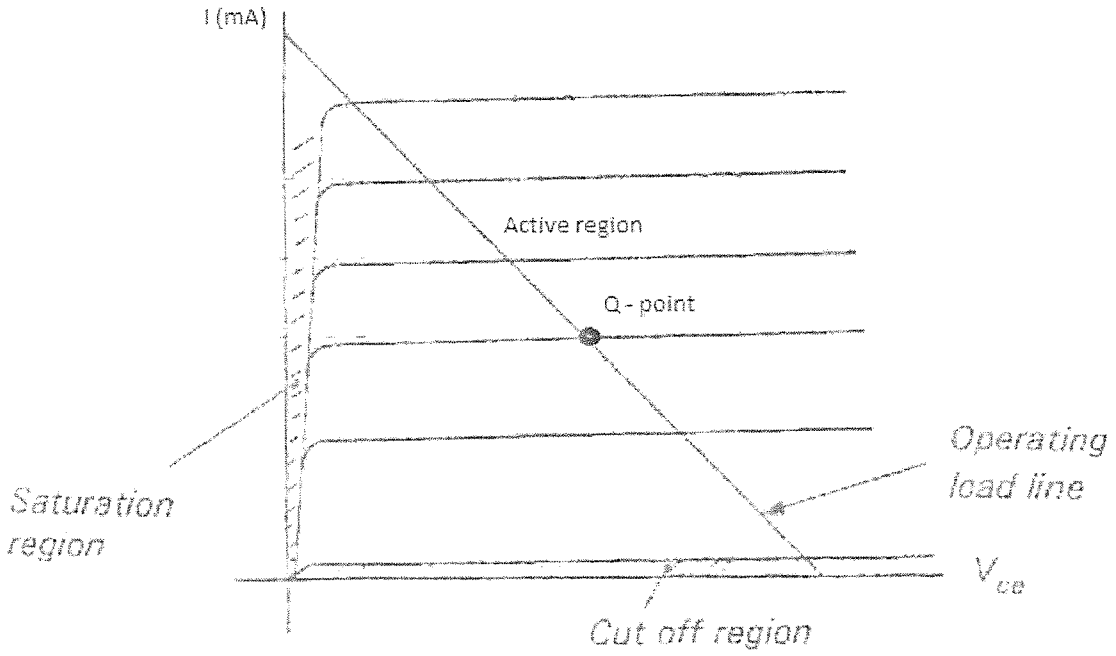

(5)

3.3 To prevent thermal runaway. (2)

3.4 To prevent negative feedback. (2)

3.5 To stabilise the amplifier. (3)
[13]

Copyright reserved

QUESTION 4

4.1

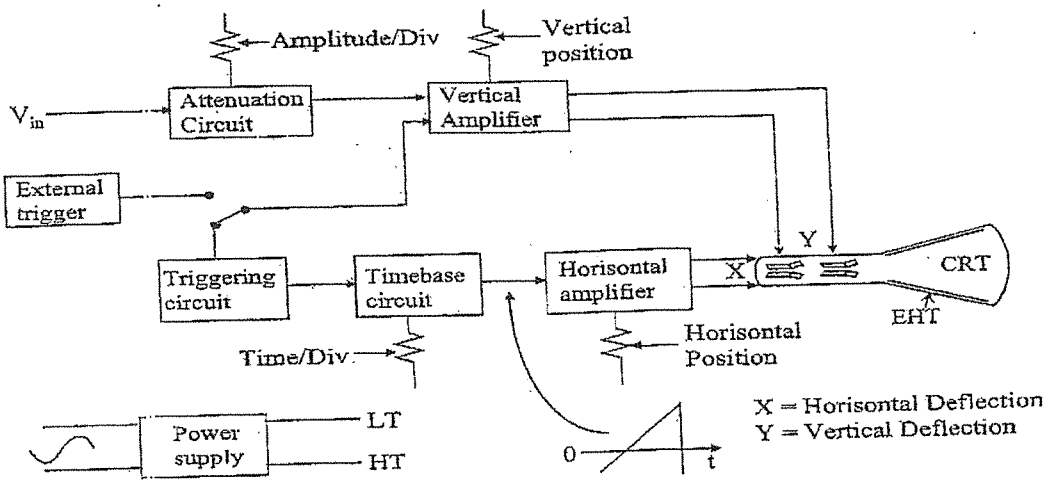

(8)

4.2 Volt/division
Time/division
Brightness
X – shift
Y – shift
Focus
Mode switch
AC/DC ground control

(8)
[16]

QUESTION 5

5.1

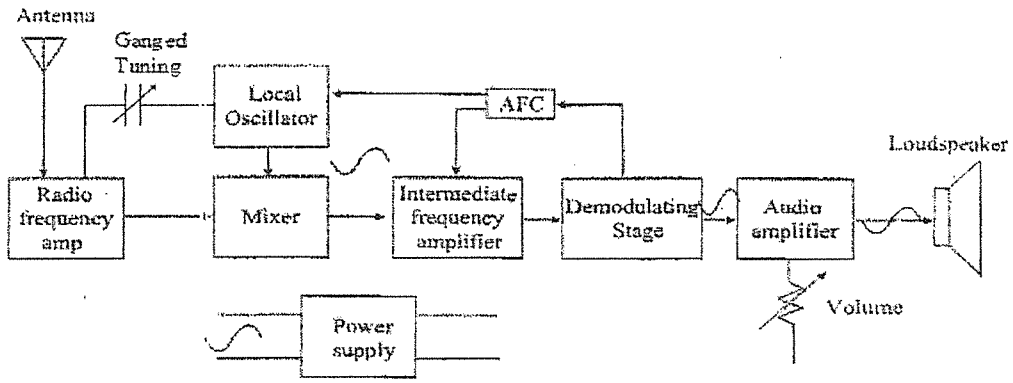

Block diagram of FM receiver

(10)

5.2

5.2.1 Frequency modulation (2)

5.2.2 Hi fidelity (2)

5.2.3 International Maritime Satellite (2)
[16]

Copyright reserved

QUESTION 6

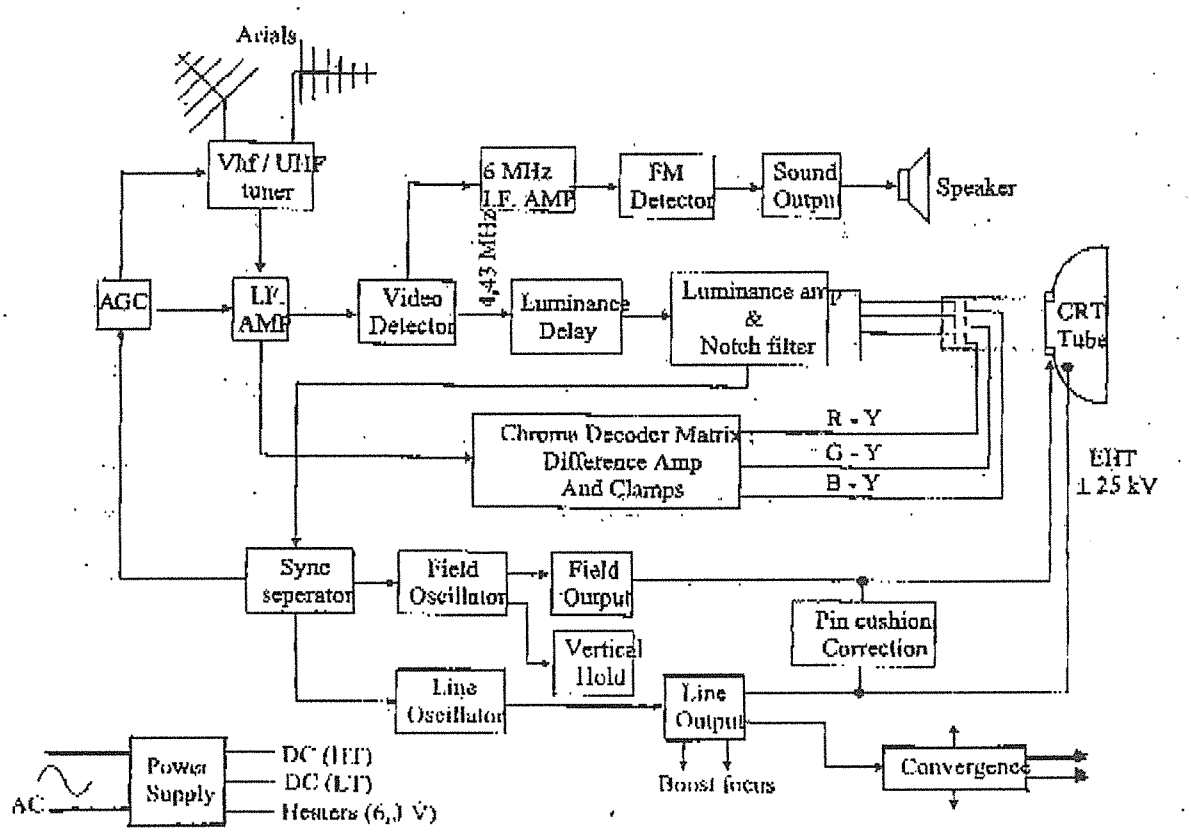

[15]

QUESTION 7

7.1 Blanking prevents the beam from being seen during line and field flyback. (2)

7.2 Separates the vertical and horizontal synch pulses to be applied to the line and field oscillators for synchronisation of the scan circuits. (2)

7.3 Line time base produces horizontal picture movement onto the screen. (2)
[6]

TOTAL: 100

Copyright reserved