higher education & training

Department:
Higher Education and Training
REPUBLIC OF SOUTH AFRICA

NATIONAL CERTIFICATE

RADIO AND TELEVISION THEORY N2

(11040832)

20 November 2020 (X-paper)
09:00–12:00

This question paper consists of 6 pages and a formula sheet of 2 pages.

201Q1E2020

Copyright reserved

DEPARTMENT OF HIGHER EDUCATION AND TRAINING
REPUBLIC OF SOUTH AFRICA

NATIONAL CERTIFICATE
RADIO AND TELEVISION THEORY N2
TIME: 3 HOURS
MARKS: 100

INSTRUCTIONS AND INFORMATION

1. Answer all the questions.
2. Read all the questions carefully.
3. Number the answers according to the numbering system used in this question paper.
4. Start each section on a new page.
5. Use only a black or blue pen.
6. Write neatly and legibly.

Copyright reserved

QUESTION 1

Indicate whether the following statements are TRUE or FALSE by writing only 'True' or 'False' next to the question number (1.1–1.15) in the ANSWER BOOK.

1.1 The type of dielectric used between the plates of a capacitor is not important when calculating the stored charge.

1.2 In AC applications, capacitors prevent the flow of current.

1.3 A cycle is defined as the part of a wave between two successive points that have the same value.

1.4 In a purely inductive electrical circuit, the voltage leads the current by 90°.

1.5 Acceptor circuits are those that contain inductors and capacitors in series.

1.6 In a parallel resonant circuit containing R, L and C, the current flow will be a maximum.

1.7 The output signal of a common emitter amplifier is 180° out of phase with the input signal.

1.8 In radio wave communication, the information transmitted is in the form of a magnetic wave.

1.9 The local oscillator in a radio receiver generates a constant frequency signal at a constant amplitude.

1.10 The Hartley oscillator uses tapped capacitance for the feedback circuit.

1.11 For an amplifier to operate as a Class-A amplifier, the working point is selected to operate in the saturation region.

1.12 A band-stop filter attenuates all frequencies above a certain cut-off frequency.

1.13 The EHT in a monochrome television receiver is lower than that found in a colour television receiver.

1.14 The time-base generator found in a CRO generates a clock waveform.

1.15 An ohmmeter must always be connected in series with the load.

(15 × 1) **[15]**

Copyright reserved

QUESTION 2

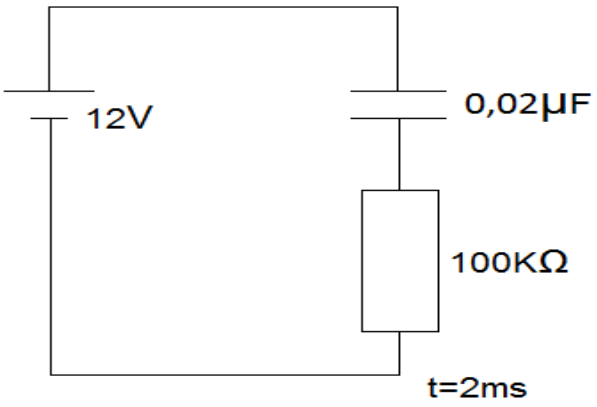

For the circuit shown above calculate the following:

2.1 The time constant (2)

2.2 The voltage across the capacitor after 2 ms (3)

2.3 The voltage across the resistor after 2 ms (2)

2.4 The instantaneous current at 2 ms (4)

[11]

QUESTION 3

3.1 Draw THREE comparative graphs to show the relationship between current and voltage waveforms for the following:

3.1.1 A circuit that contains only resistance

3.1.2 A circuit that contains only inductance

3.1.3 A circuit that contains only capacitance

(3 × 3) (9)

3.2 Prove that Z = R for a series resonant circuit containing R, L and C. (5)

[14]

QUESTION 4

For the common emitter amplifier shown below, explain the function of each of the following:

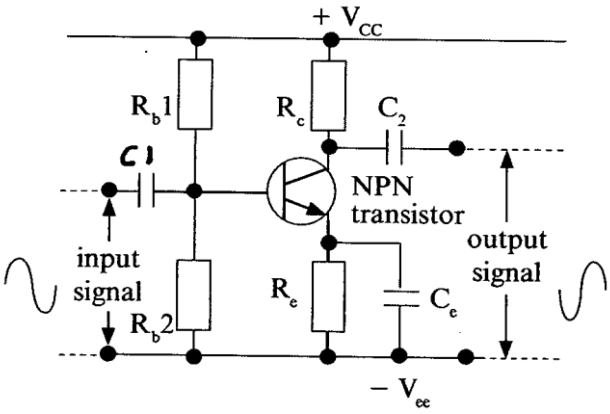

4.1 C_1 and C_2

4.2 C_e

4.3 R_e

4.4 R_{b1} and R_{b2}

4.5 R_c

(5 × 2) **[10]**

QUESTION 5

5.1 Briefly explain the operation of the audio frequency (AF) amplifier that is found in a radio receiver. (2)

5.2 Distinguish between Class-A and Class-B operation as regards amplifier operation. (6)

5.3 Give the application, advantage and disadvantage of both Class-A and Class-B operation. (6)
[14]

QUESTION 6

To produce a well-defined colour image, additional subsections must be included in the colour TV receiver to process the complex composite signal.

Name and briefly explain each subsection. (9 × 2) **[18]**

Copyright reserved

QUESTION 7

State and explain SIX general patterns that can be generated by a pattern generator. **[12]**

QUESTION 8

Briefly explain FIVE workshop safety guidelines. **[6]**

TOTAL: 100

Copyright reserved

RADIO AND TELEVISION THEORY N2

FORMULA SHEET

CAPACITOR CALCULATIONS

Capacitors in series: $$\frac{1}{C_T} = \frac{1}{C_1} + \frac{1}{C_2} + \ldots$$

Capacitors in parallel: $$C_T = C_1 + C_2 + \ldots$$

Instantaneous voltage across a capacitor: $$V_c = V\left(1 - e^{\frac{-t}{RC}}\right)$$

Initial charging current through a capacitor: $$i = \frac{V}{R} \times e^{\frac{-t}{RC}}$$

Time constant: $$T = R \times C$$

Charge of capacitor: $$Q = C \times V$$

AC THEORY

Inductive reactance: $$X_L = 2 . \pi . F . L$$

Capacitive reactance: $$X_c = \frac{1}{2 . \pi . F . C}$$

Impedance for RL, RC and RLC circuits:

$$Z = \sqrt{R^2 + X_L^2} \quad Z = \sqrt{R^2 + X_C^2} \quad Z = \sqrt{R^2 + (X_L \simeq X_c)^2}$$

Circuit current for RL, RC and RLC circuits:

$$I_T = \frac{V}{X_L} \quad I_T = \frac{V}{X_C} \quad I_T = \frac{V}{Z}$$

Voltage drop across components:

$$V_R = I \times R \quad V_L = I \times X_L \quad V_C = I \times X_C$$

Copyright reserved

Power factor: $Cos\,\theta = \frac{R}{Z}$

Phase angle: $\phi = Cos^{-1}\frac{R}{Z}$

Resonant frequency: $f_r = \frac{1}{2.\pi.\sqrt{L.C}}$

Q-factor: $Q = \frac{1}{R}.\sqrt{\frac{L}{C}}$

OHM'S LAW

Resistors in series: $R_T = R_1 + R_2 + ...$

Resistors in parallel: $\frac{1}{R_T} = \frac{1}{R_1} + \frac{1}{R_2} + ...$

Voltage drop: $V = I \times R$

Circuit current: $I = \frac{V}{R}$

OSCILLOSCOPE CALCULATIONS

Period = Time/Division × Horizontal divisions

Amplitude = Volts/Division × Vertical divisions

Frequency = $\frac{1}{Period}$

RMS voltage = 0,707 × Peak

Average voltage = 0,637 × Peak

Voltage (Peak-to-peak) = 2 × Peak

Copyright reserved