higher education & training

Department:
Higher Education and Training
REPUBLIC OF SOUTH AFRICA

MARKING GUIDELINE

NATIONAL CERTIFICATE

NOVEMBER EXAMINATION

RADIO AND TELEVISION THEORY N2

22 NOVEMBER 2016

This marking guideline consists of 7 pages.

Copyright reserved

QUESTION 1

1.1 The ratio of viewable width to the viewable height of a picture on a CRT.

1.2 Output of a transmitter, onto which the required signal is modulated.

1.3 The ability of a monochrome receiver to receive a colour transmission and show a monochrome picture of reasonable quality.

1.4 The part of a television signal that carries brightness information.

1.5 Brief retention of an image on the retina of the eye after the light from an image has stopped.

1.6 The movement of an electron beam within the CRT envelope.

1.7 A portion of the receiver that comprises the RF, IF and demodulator stages.

1.8 A device that converts one form of energy into another.

1.9 Horizontal movement of the beam in a CRT.

1.10 Circuit in a television receiver that prevents the beam current in a CRT from being exceeded.

(10 × 2) **[20]**

QUESTION 2

2.1

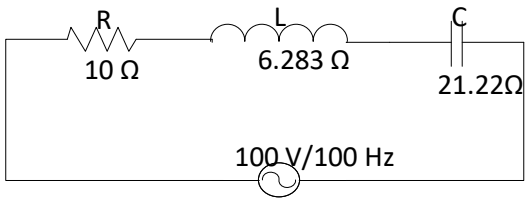

(4)

2.2 $X_L = 2\pi fl$

$$L = \frac{X_L}{2\pi F}$$

$$= \frac{6.283}{2\pi \times 100}$$

$$= 0.01\ H\ (10mH).$$

(2)

2.3 $X_C = \frac{1}{2\pi fc}$

$C = \frac{1}{2\pi f X_C}$

$= \frac{1}{2\pi \times 100 \times 21.22}$

$= 75\ \mu F$ (2)

2.4 $Z = \sqrt{R^2 + (X_C - X_L)^2}$

$= \sqrt{10^2 + (21.22 - 6.283)^2}$

$= 17{,}975\ \Omega.$ (2)

2.5 $I = \frac{V}{Z}$

$= \frac{100}{17.975}$

$= 5.563\ A.$ (2)

2.6 $\Theta = Cos^{-1}\ \frac{R}{Z}$

$= \frac{10}{17.975}$

$= 0{,}556$

$= 56{,}197°$ (2)

2.7 $V_R = I \times R$

$= 5{,}563 \times 10\sqrt{}$

$= 55{,}63\ V\ \sqrt{}$ (2)

$V_L = I \times X_L$

$= 5{,}563 \times 6{,}283\sqrt{}$

$= 34{,}952\ V\sqrt{}$ (2).

$V_C = I \times X_C$

$= 5{,}563 \times 21{,}22\ \sqrt{}$

$= 118{,}046\ V\ \sqrt{}$ (2). (6)

[20]

Copyright reserved

QUESTION 3

3.1

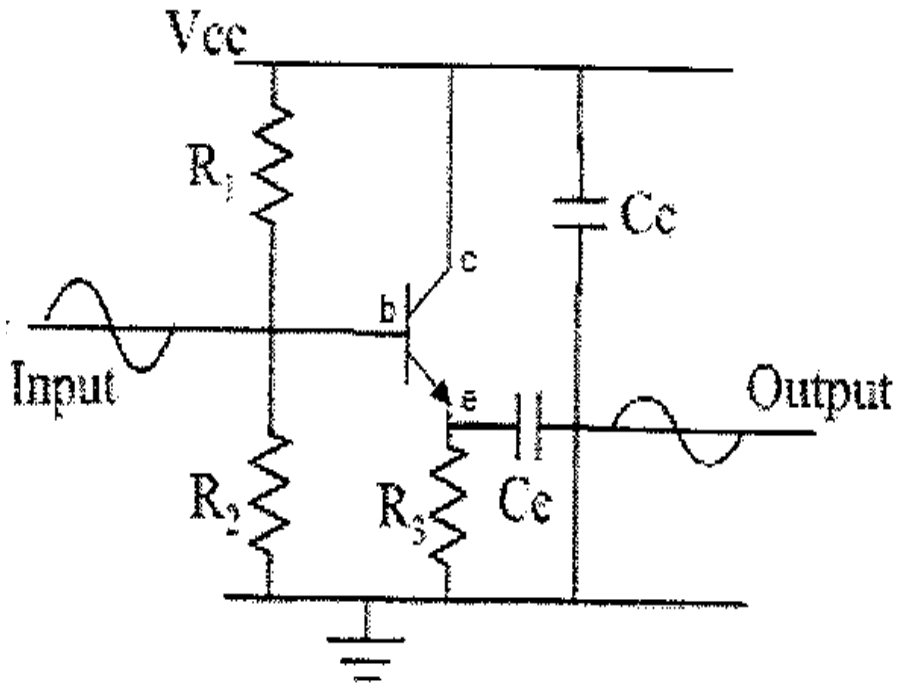

(8 × 1) (8)

3.2
- High current gain
- Voltage gain less than unity
- Zero phase shift
- High input impedance
- Low output impedance
- Power gain medium

(Any 6 × 1) (6)

[14]

QUESTION 4

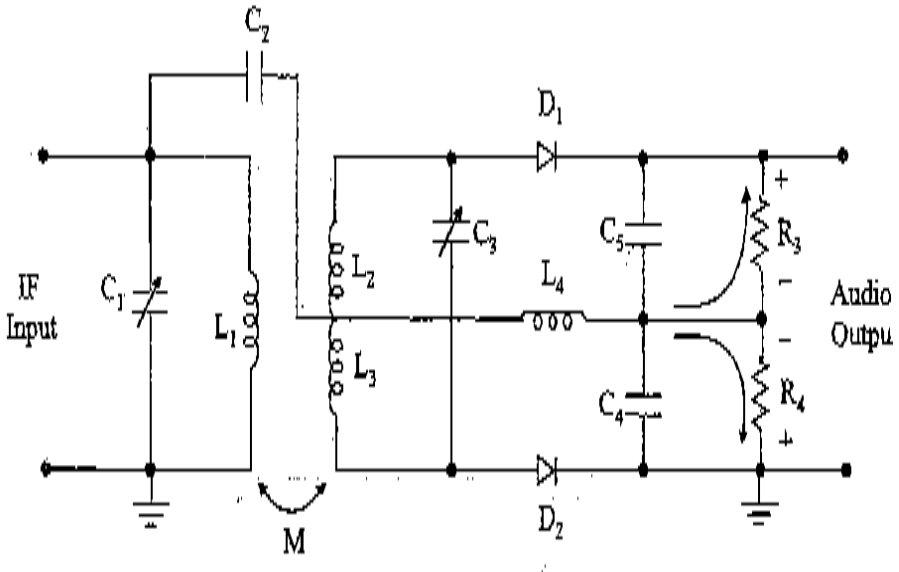

[10]

QUESTION 5

1. Tuner
2. IF amplifier
3. Demodulator
4. Sound IF
5. FM demodulator
6. Audio preamplifier
7. Audio power amplifier
8. Video preamplifier
9. Video output
10. Cathode ray tube
11. Synch separator
12. Field time-base
13. Line time-base
14. EHT
15. Power supply

(15 × 1) **[15]**

QUESTION 6

6.1

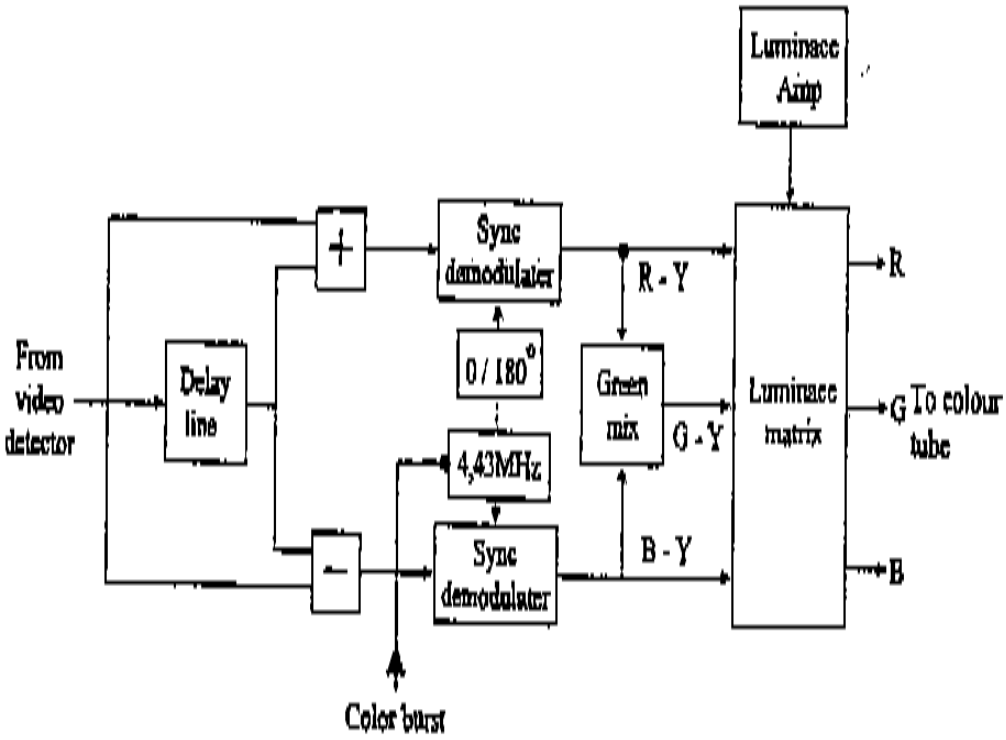

(½ mark for each correct label) (7)

6.2
- Auto-ranging facility provided for.
- No parallax error.
- Very high sensitivity over the full range.
- More robust against mechanical shock.
- Reversal of leads (probes) compensated for.
- Reading immediate – no interpolation of scale needed.
- Overload indicated by lamp – fusing. (Any 6 × 1) (6)

[13]

QUESTION 7

7.1 Period $= 30\ m/s \times 4$
$= 30 \times 10^{-3} \times 4$
$= 120$ m/s

7.2 Frequency $= \frac{1}{time}$

$= \frac{1}{120 \times 10^{-3}}$

$= 8\ Hz.$

7.3 RMS voltage $= 0.707 \times$ Voltage peak
$= 0.707 \times 4 \times 10^{-3}$
$= 2.83\ mV$ (V p-p = 5,66 mV)

7.4 Average voltage $= 0.637 \times$ Voltage peak
$= 0.637 \times 4 \times 10^{-3}$
$= 2.54\ mV$ (V p-p = 5,08 mV)

(4 × 2) **[8]**

TOTAL: 100

Copyright reserved