higher education & training

Department:
Higher Education and Training
REPUBLIC OF SOUTH AFRICA

MARKING GUIDELINE

NATIONAL CERTIFICATE

RADIO THEORY N3

2 August 2021

This marking guideline consists of 6 pages.

Copyright reserved

1.1 $N = 10\log\frac{P_{out}}{P_{in}}$ ✓ but $P_{out} = \frac{E_2{}^2}{R_2}$

$= 10\log\frac{\frac{E_2{}^2}{R_2}}{\frac{E_1{}^2}{R_1}}$ ✓ $P_{in} = \frac{E_1{}^2}{R_1}$

$= 10\log\frac{E_2{}^2}{R_2}.\frac{R_1}{E_1{}^2}$

$= 10\log\left(\frac{E_2}{E_1}\right)^2 \times \frac{R_1}{R_2}$ ✓

$= 10\log\left(\frac{E_2}{E_1}\right)^2 + 10\log\frac{R_1}{R_2}$ ✓

$= 20\log\frac{E_2}{E_1} + 10\log\frac{R_1}{R_2}$ $R_1 = R_2$

$= 20\log\frac{E_2}{E_1} + 10\log 1$ ✓

$N = 20\log\frac{E_2}{E_1} + 0$ ✓ (6)

1.2 Gain (N) = Antenna gain – cable loss ✓
= 8,5 – 2.25 ✓
= 6,25dB ✓

$\therefore N = 10\log\frac{P_{out}}{P_{in}}$

$P_{out} = P_{in}\,\text{antilog}\left(\frac{N}{10}\right)$ ✓

$= 30\,\text{antilog}\left(\frac{6,25}{10}\right)$ ✓

$= 30(4,21696)$

$= 126,509W$ ✓ (6)

[12]

QUESTION 2

2.1 It is the ability of the op-amp to reject (not pass) signals that are simultaneously present at both inputs. (2)

2.2
- 100 000 and higher
- Low to 5MHz (2)

2.3
- Infinite Open-loop gain
- Infinite Input resistance
- Infinite Bandwidth with zero phase shift
- Output impedance is zero
- Output voltage is zero when input voltage is zero

Or
Zero noise
Infinite common mode rejection ratio (5)

2.4 Yes (1)
[10]

QUESTION 3

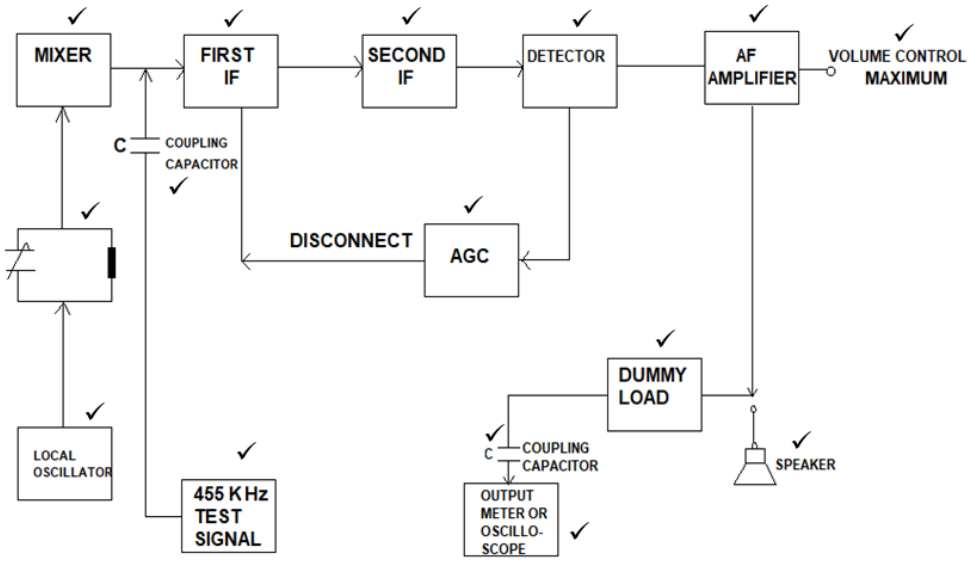

[15]

QUESTION 4

4.1

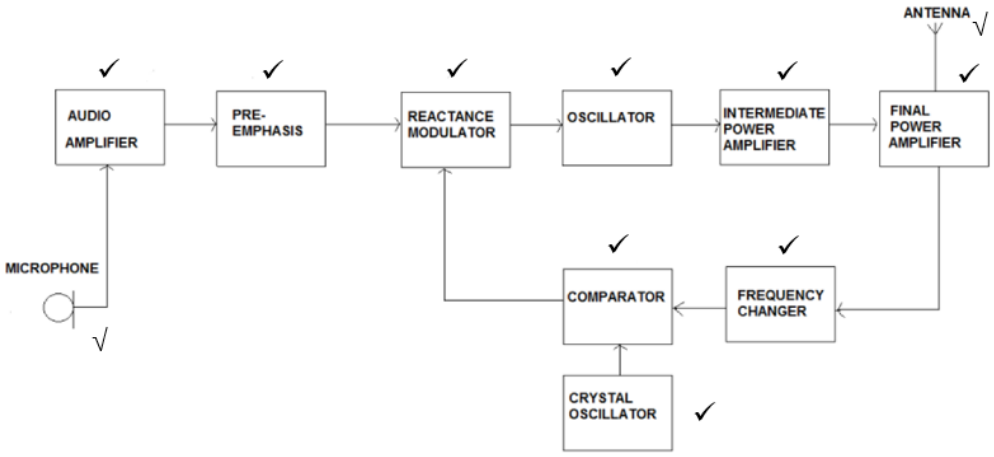

½ mark for the Microphone and ½ mark for the Antenna.

(10)

4.2

- Any momentary deviation from the centre frequency (undesired)✓ is called scintillation and could give rise to distortion in the demodulated signal.✓
- In order to keep the centre frequency of the transmitter constant, ✓ a sample is taken from the transmitter and fed✓ to the comparator.
- The comparator also receives an input from a very accurate reference oscillator. ✓ If these two inputs are equal (co-incidence) then the output of the comparator is zero. ✓
- However, if the transmitted frequency is too high or too low, ✓ an error voltage is sent from the comparator back to the master oscillator.✓
- This voltage is applied to the varicap diode✓ and causes the master oscillator to vary the frequency of oscillations very slightly. ✓

(10)
[20]

QUESTION 5

5.1

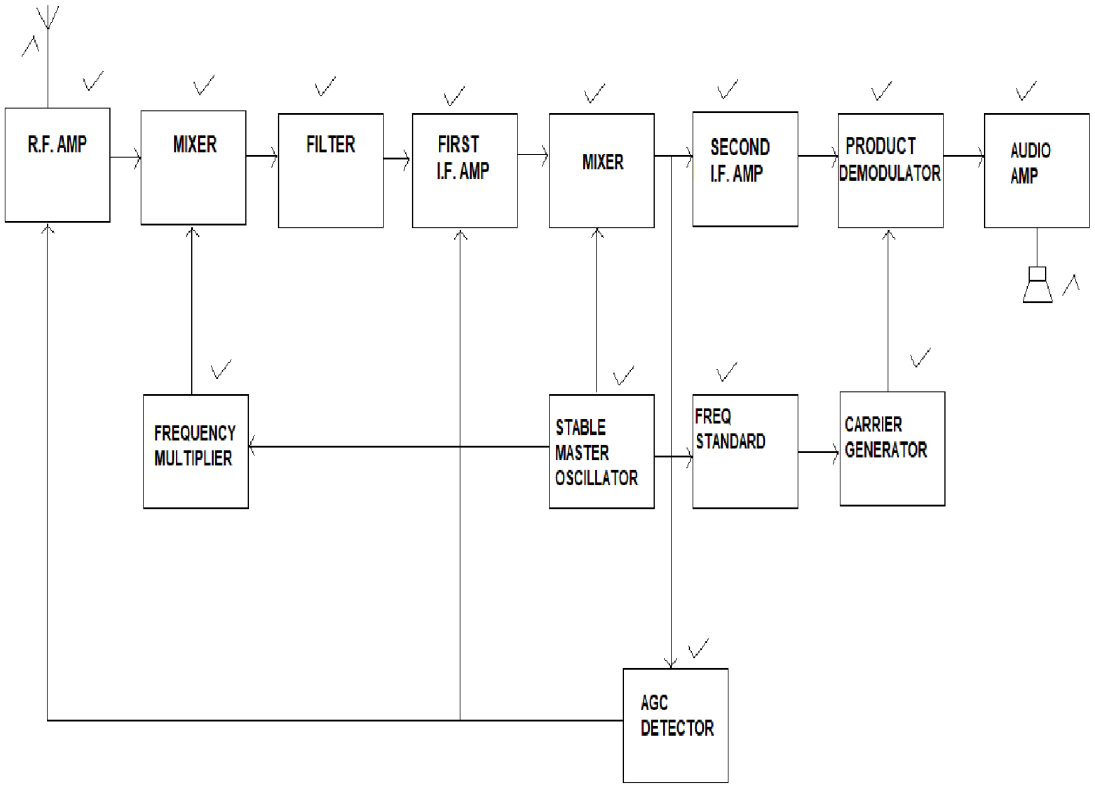

+1 for correct arrows
½ mark for the Microphone and ½ mark for the Antenna. (15)

5.2 Advantages:

- More effective use of the available frequency spectrum.
- Less subject to fading.
- Higher percentage of power in the radiated intelligence. (3)

Disadvantages:

- High cost
- Oscillator frequencies involved are very critical and must be stabilized. (2)

[20]

QUESTION 6

6.1 It is its radiation pattern/polar diagram. (2)

6.2

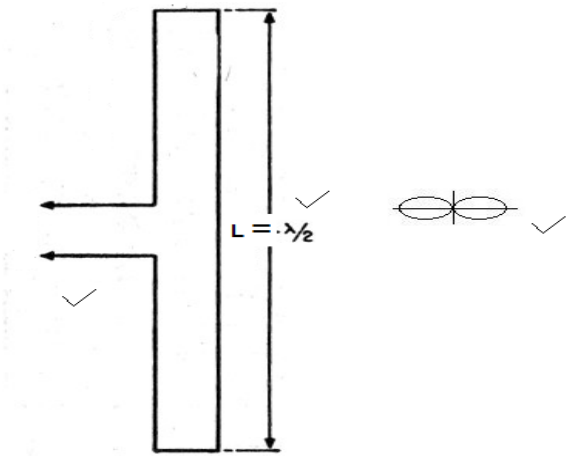

(3)

6.3
- Approximately 4 times greater radiation resistance
- A higher input impedance
- A greater bandwidth (3)

[8]

QUESTION 7

7.1 False
7.2 True
7.3 True
7.4 False
7.5 True

(5 × 2) **[10]**

QUESTION 8

- Digital data comprises of ones and zeros.✓
- Data of this nature can be applied to a modem✓ and sent as Frequency Shift Keying (FSK) information to its destination.
- It is not subject to errors since the ones and zeros are transmitted as shifts in frequency✓
- and cannot be affected by attenuation or amplitude variations✓ or interference.
- Analogue data however does comprise specific levels and variations in amplitude due to transmission losses – can✓ result in severe errors. **[5]**

TOTAL: 100

Copyright reserved