higher education & training

Department:
Higher Education and Training
REPUBLIC OF SOUTH AFRICA

# MARKING GUIDELINE

## NATIONAL CERTIFICATE

## RADIO THEORY N2

## 04 AUGUST 2021

**This marking guideline consists of 5 pages.**

Copyright reserved

## QUESTION 1

1.1 False
1.2 False
1.3 True
1.4 False
1.5 True
1.6 True
1.7 True
1.8 False
1.9 False
1.10 False
1.11 True
1.12 False
1.13 True
1.14 False
1.15 True

(15 × 1) **[15]**

## QUESTION 2

2.1 $X_L = 2\pi fL$

$= 2\pi \times 12 \times 10^3 \times 10 \times 10^{-3}$

$= 753{,}98\Omega$ ✓

$X_C = \frac{1}{2\pi fc} = \frac{1}{2\pi \times 12 \times 10^3 \times 10 \times 10^{-9}}$

$= 1326{,}29\Omega$ ✓✓

$Z = \sqrt{R^2 + (X_L - X_C)^2}$ ✓

$= \sqrt{500^2 + (753{,}98 - 1326{,}29)^2}$ ✓

$= \sqrt{250000 + 327538{,}736}$ ✓

$= 759{,}96\Omega$ ✓

$I = \frac{V}{Z} = \frac{20}{759{,}96} = 26{,}3mA$ ✓✓

(9)

2.2 $V_R = I \times R$

$= 26{,}3 \times 10^{-3} \times 500$

$= 13{,}15\,V$ ✓✓

$V_L = I \times X_L$

$= 26{,}3 \times 10^{-3} \times 753{,}98$

$= 19{,}83V$ ✓✓

$V_C = I \times X_C$

$= 26{,}3 \times 10^{-3} \times 1326{,}29$

$= 34{,}88V$ ✓✓

(6)
**[15]**

## QUESTION 3

3.1

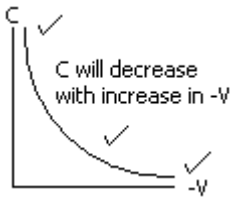


(3)

3.2

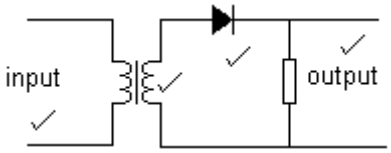


(4)

3.3 Valence electrons✓✓ (2)

3.4 0,2 V or 0,3 V✓ (1)

**[10]**

## QUESTION 4

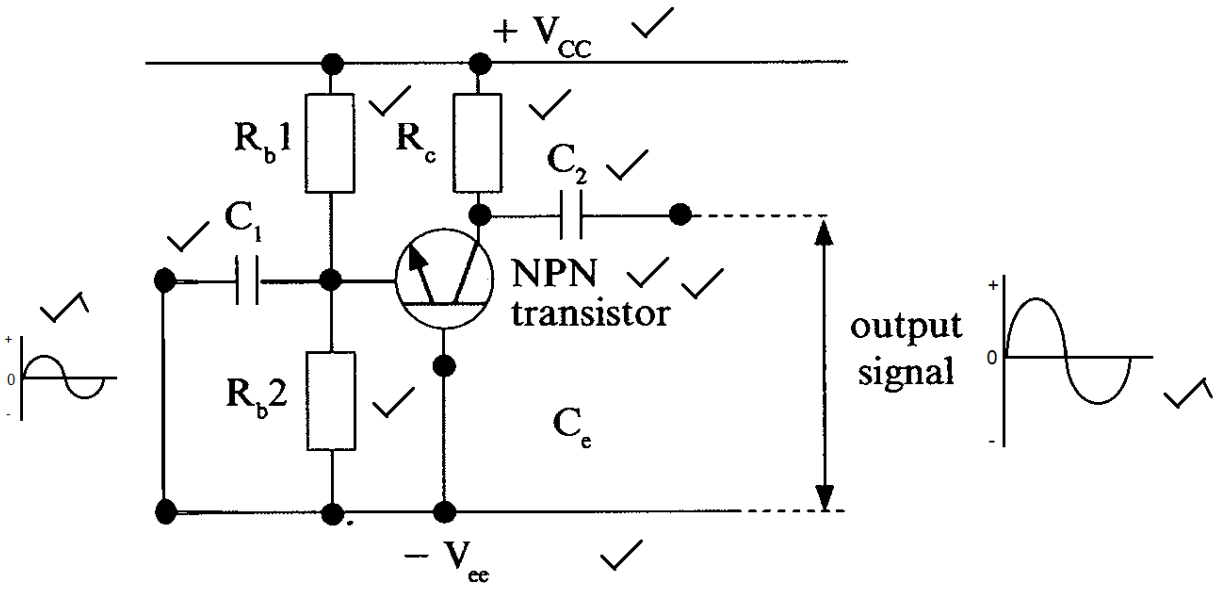


½ mark each for the input and the output waveform.

**[10]**

## QUESTION 5

Sound waves move the diaphragm✓ which is attached to the coil,✓ causing the coil to move in the magnetic field of the permanent magnet.✓✓ This produces an electrical signal in the coil.✓

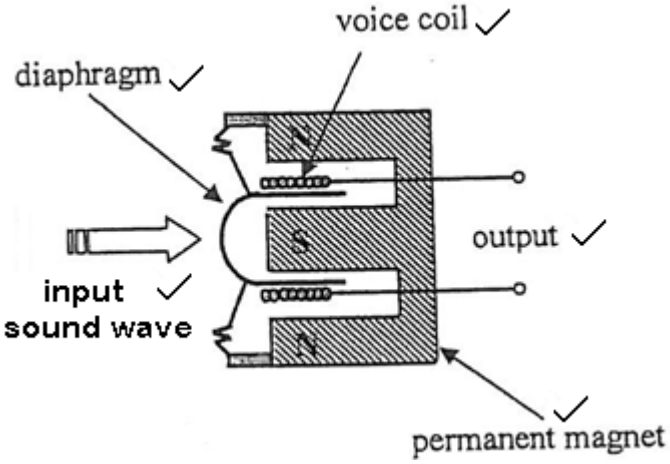


**[10]**

## QUESTION 6

6.1

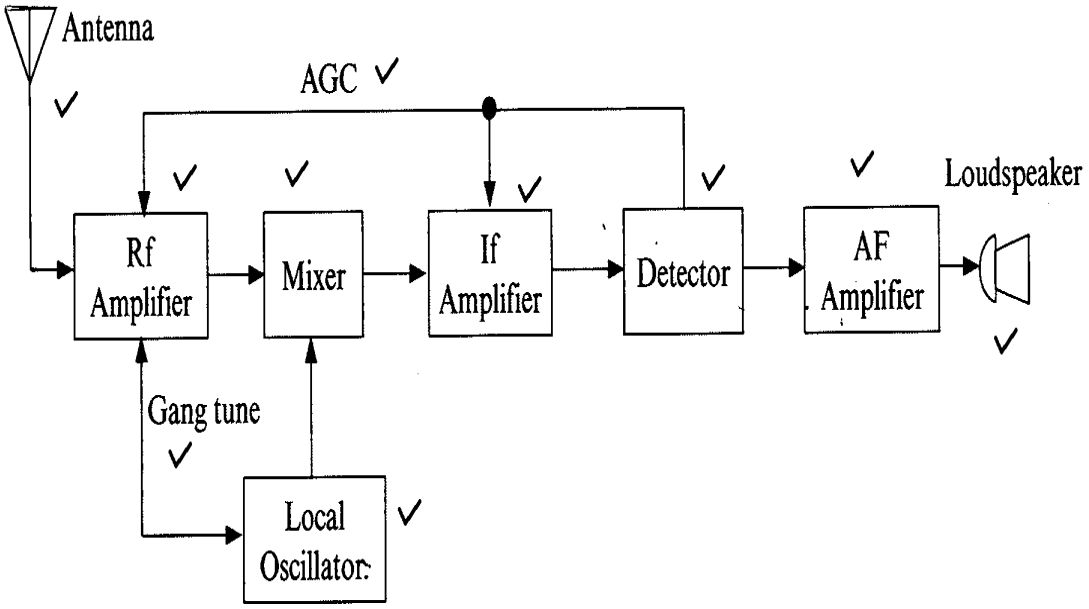


(10)

6.2
- *Selectivity* is the ability of an RF stage to select a particular frequency from a range of frequencies and to reject all other unwanted frequencies.
- *Sensitivity* is the ability of a receiver to use/detect weak signals. (2 × 2) (4)

**[14]**

## QUESTION 7

7.1 $R_S = \frac{V}{I_m} - R_m = \frac{100}{120 \times 10^{-3}} - 150$ ✓✓

$= 683{,}33\Omega$ ✓ (3)

7.2 7.2.1 Controls the vertical scale (2)

7.2.2 Controls the horizontal scale (2)

7.2.3 Makes the trace on the screen brighter or dimmer (1)

7.2.4 Moves the trace up or down (vertical) (1)

7.2.5 Moves the trace left or right (horizontal) (1)

**[10]**

## QUESTION 8

- Dry joints – caused by old solder or bad soldering
- Discoloured components – will cause the component to lose its functional capabilities. Two causes of discolouration are aging and heat.
- Sparks – caused by lack of insulation
- Damaged components – easy to spot
- Loose or broken connections – wire broken off (Any 3 × 2) **[6]**

## QUESTION 9

9.1
- Saturation region – transistor is on, transistor is used as a switch
- Active region – transistor is used as an amplifier
- Cut off region – transistor is off (3 × 2) (6)

9.2
- Depletion mode MOSFET
- Enhancement mode MOSFET (2)

9.3 Negative feedback is when part of the output signal of an amplifier is fed back in anti-phase (180 degrees out of phase) with the input. (2)

**[10]**

**TOTAL: 100**

Copyright reserved