higher education & training

Department:
Higher Education and Training
REPUBLIC OF SOUTH AFRICA

MARKING GUIDELINE

NATIONAL CERTIFICATE

RADIO THEORY N2

5 AUGUST 2019

This marking guideline consists of 6 pages.

Copyright reserved

QUESTION 1

1.1 False
1.2 False
1.3 False
1.4 False
1.5 True
1.6 False
1.7 True
1.8 True
1.9 True
1.10 False

(10 × 1) **[10]**

QUESTION 2

2.1

$$\frac{1}{C_T} = \frac{1}{C_1} + \frac{1}{C_2}$$

$$\frac{C_T}{1} = \frac{1}{\frac{1}{C_1} + \frac{1}{C_2}}$$

$$= \frac{1}{\frac{1}{200 \times 10^{-9}} + \frac{1}{75 \times 10^{-6}}} \checkmark$$

$$= 199{,}46\ 8\ \text{nF} \checkmark$$

$$Q = C_T V_T$$

$$= 199{,}468 \times 10^{-9} \times 100$$

$$= 1{,}99468 \times 10^{-9}$$

$$= 1{,}99468\ \text{nF} \approx 2\text{nF} \checkmark$$

(3)

2.2

$$V_{C1} = \frac{Q}{C}$$

$$= \frac{1{,}99 \times 10^{-9}}{200 \times 10^{-9}}$$

$$= 9{,}95\ \text{mV} \checkmark$$

$$V_{C2} = \frac{Q}{C}$$

$$= \frac{1{,}99 \times 10^{-9}}{75 \times 10^{-6}}$$

$$= 26{,}5\ \mu\text{V} \checkmark$$

(2)
[5]

Copyright reserved

QUESTION 3

3.1 $X_L = 2\pi fL$

$= \underline{47{,}124\ \Omega}$ ✓

$X_C = \frac{1}{2\pi fc} = \underline{21{,}221\ \Omega}$ ✓

$Z = \sqrt{15^2 + (47{,}124 - 21{,}221)^2}$ ✓✓✓

$= \underline{29{,}933\ \Omega}$ ✓ (6)

3.2 $I = \frac{V}{Z} = \frac{100}{29{,}933}$ ✓

$= \underline{3{,}341\ \text{A}}$ ✓ (2)

3.3 $V_R = IR = 3{,}341 \times 15 = \underline{50{,}115\ \text{V}}$ ✓

$V_L = IX_L = 3{,}341 \times 47{,}124 = \underline{157{,}44\ \text{V}}$ ✓

$V_C = IX_C = 3{,}341 \times 21{,}221 = \underline{70{,}899\ \text{V}}$ ✓ (3)

3.4 $\text{Power factor} = Cos\theta = \frac{R}{Z} = \frac{15}{29{,}933}$ ✓

$= \underline{0{,}501}$ ✓ (2)

3.5 $\text{Power} = VICos\theta = 100 \times 3{,}341 \times 0{,}501 = \underline{167{,}434\ \text{W}}$ ✓✓

or

$\text{Power} = I^2R = (3{,}341)^2 \times 15 = \underline{167{,}434\ \text{W}}$ (2)

[15]

QUESTION 4

4.1

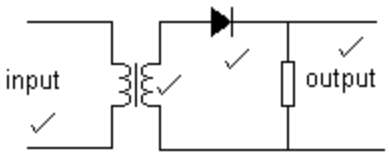

(4)

4.2

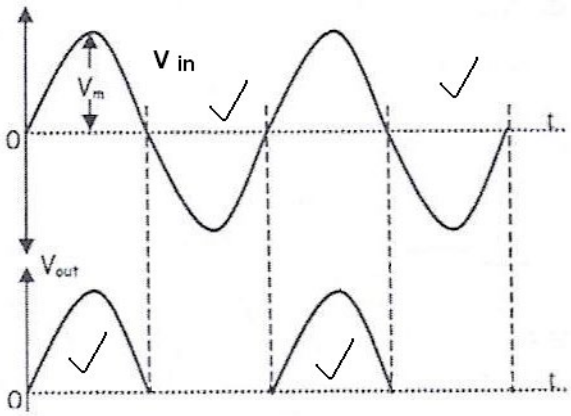

(4)

4.3
- Depletion MOSFET
- Enhancement MOSFET

(2)
[10]

QUESTION 5

5.1

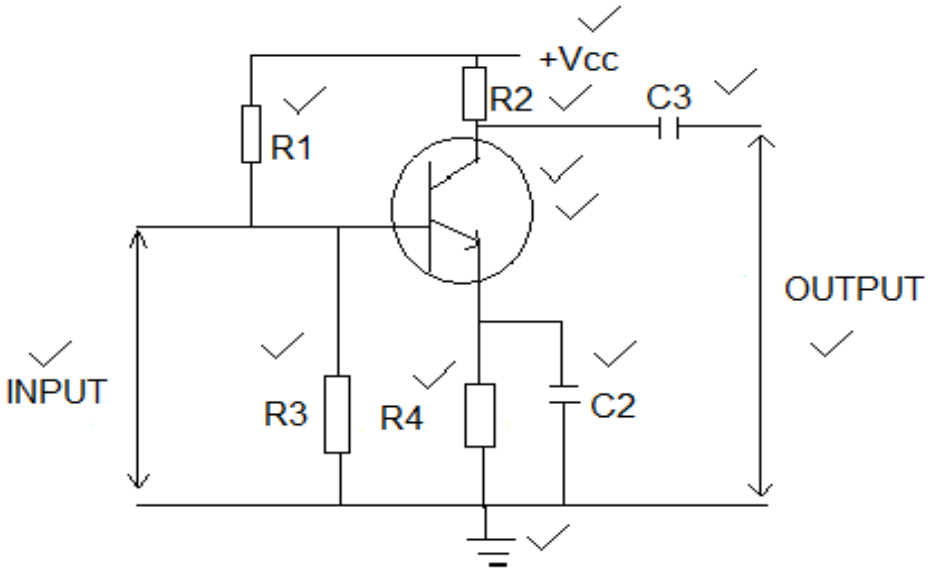

(12)

5.2
5.2.1 R_1 AND R_3
5.2.2 R_4 AND C_2
5.2.3 R_2
5.2.4 C_3

(4 × 2) (8)
[20]

QUESTION 6

6.1
- Ribbon
- Moving coil
- Crystal
- Carbon
- Capacitor (Any 4 × 1) (4)

6.2

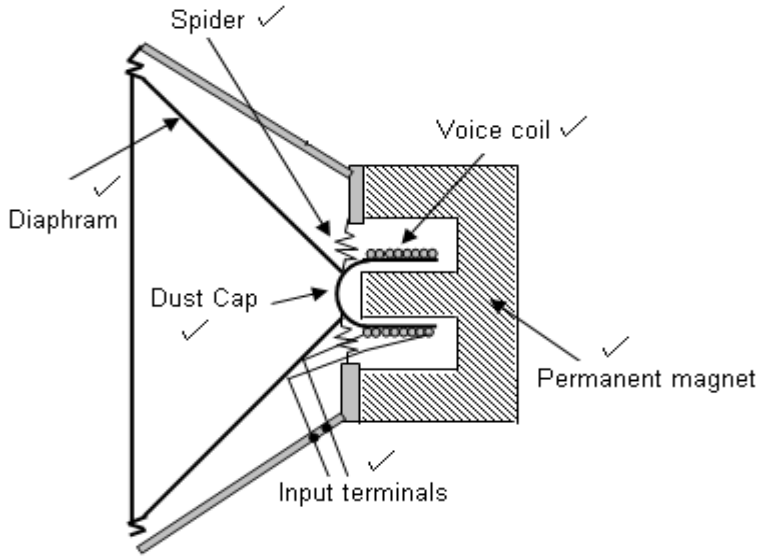

(6)
[10]

QUESTION 7

7.1 In AM modulation the audio signal✓ is used to vary the amplitude✓ of a higher-frequency carrier signal.✓ (3)

7.2

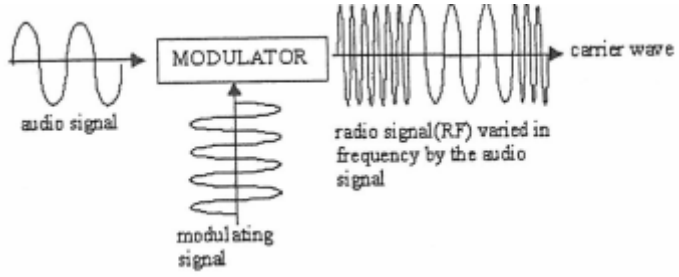

(2 marks for each waveform) (6)

7.3 Sensitivity is the ability of a receiver to pick up weak signals and amplify it to a usable level. Selectivity is the ability of a receiver to receive one signal and reject all other signals. (2 + 2) (4)

7.4 Converts electrical waves into sound waves (2)
[15]

QUESTION 8

8.1
- Collate the symptoms.
- Inspect equipment for obvious defects.
- Test and locate the suspected stage.
- Test components in faulty stage.
- Replace faulty components and test equipment. (5)

8.2
8.2.1 Chooses the vertical scale
8.2.2 Chooses the horizontal scale
8.2.3 Makes the trace on the screen brighter or dimmer
8.2.4 Moves the trace up or down (vertical)
8.2.5 Moves the trace left or right (horizontal)

(5 × 2) (10)
[15]

TOTAL: 100

Copyright reserved