higher education & training

Department:
Higher Education and Training
REPUBLIC OF SOUTH AFRICA

MARKING GUIDELINE

NATIONAL CERTIFICATE

RADIO THEORY N2

1 AUGUST 2018

This marking guideline consists of 6 pages.

Copyright reserved

QUESTION 1

1.1

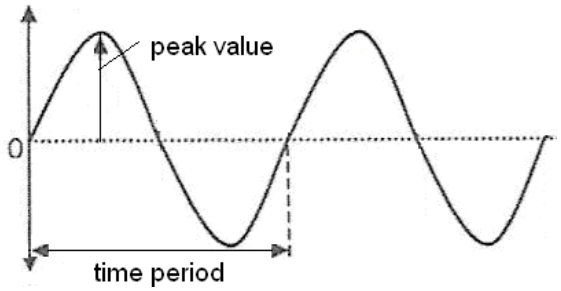

(4)

1.2 RMS voltage = $0,707 \times V_{maximum}$

$V_{max} = = \frac{212,1}{0,707}$ ✓ = 300 V✓

Average voltage = 0,637 × 300✓ = 191,1 V✓ (4)

1.3 $\frac{1}{C_T} = \frac{1}{C_1} + \frac{1}{C_2} = \frac{1}{10 \times 10^{-6}} + \frac{1}{20 \times 10^{-6}}$ ✓ $= \frac{3}{20 \times 10^{-6}} = 150\ 000$✓

$C_T = 0,00000667 = 6,67\ \mu F$✓ (3)

1.4
- Area of the plates
- Dielectric
- Distance between the plates (3)

1.5 1.5.1 $f_r = \frac{1}{2.\pi.\sqrt{LC}} = \frac{1}{2.\pi.\sqrt{20 \times 10^{-3} \times 68 \times 10^{-6}}}$ ✓

$= 136,47$ Hz✓

1.5.2 $X_L = 2.\pi.F.L = 2.\pi.136,47 \times 20 \times 10^{-3}$ ✓

$= 17,15\ \Omega$✓

1.5.3
- $Q = \frac{X_L}{R} = \frac{17,15}{10}$ ✓ = 1,72✓
- $Q = \frac{1}{R}\sqrt{\frac{L}{C}}$ ✓= 1,72✓

(Any ONE)
(3 × 2) (6)
[20]

QUESTION 2

2.1
$$R_{SH} = \frac{I_m \times R_m}{I_T - I_m} \quad R_{SH} = \frac{1\times10^{-3} \div 200}{50\times10^{-3} - 1\times10^{-3}} \checkmark$$
$$R_{SH} = \frac{0,2}{49\times10^{-3}} \checkmark$$
$$= 4,08\ \Omega \checkmark \qquad (3)$$

2.2
- The correct polarity should always be observed.
- Always select the highest range and then decrease the range.
- Always connect a voltmeter in parallel.
- Always take the loading effect of a voltmeter into account. (4)

2.3
- AC voltage measurements
- DC voltage measurements
- Studying waveforms and other time-varying quantities
- Frequency measurements
- Indicating the gain of an amplifier
- Indicating the phase difference between two signals
- Indicating distortion in waveforms (Any 6 × 1) (6)

2.4 2.4.1 To make the display sharp and clear

2.4.2 To control the amplitude of the display

(2 × 1) (2)
[15]

QUESTION 3

3.1 When the AC sine wave is positive (positive half) on the anode the diode is forward-biased and conducts current. When the AC sine wave is negative (negative half) on the anode the diode is reverse-biased and does not conduct. (4)

3.2

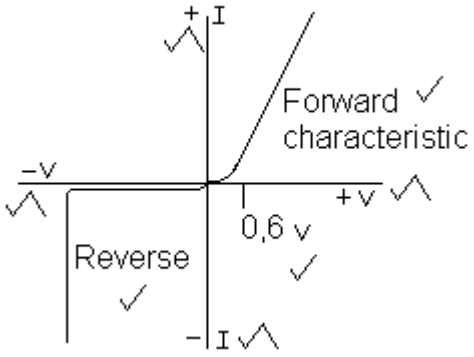

(5)

3.3 Varactor diode (1)
[10]

QUESTION 4

4.1
- Common emitter
- Common base
- Common collector (3)

4.2



- Emitter: supplies the majority carriers
- Collector: collects the charged carries
- Base: controls amount of current between emitter and collector (4)

4.3
- Depletion type
- Enhancement type (2)

4.4
4.4.1 none
4.4.2 very high
4.4.3 180 degrees
4.4.4 high
4.4.5 0 degrees
4.4.6 high

(6 × 1) (6)
[15]

QUESTION 5

5.1 Advantage: Best frequency response✓
High quality✓
Disadvantage: Very expensive✓
Requires external supply✓ (2 + 2) (4)

5.2

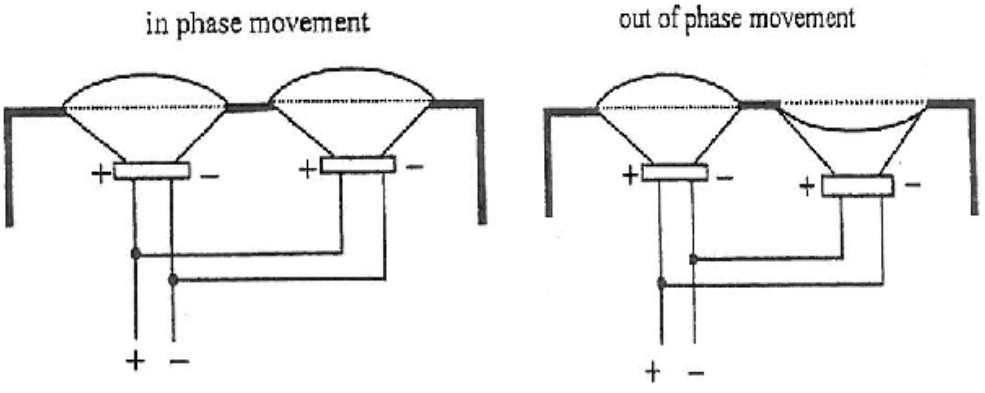

(4)

5.3 A high-frequency signal is fed to the erase head by an internal oscillator which forces the magnetic particles on the tape out of alignment. (2)
[10]

QUESTION 6

6.1 6.1.1 RF amplifier
6.1.2 Mixer
6.1.3 IF amplifier
6.1.4 Detector
6.1.5 Audio amplifier
6.1.6 Ganged tuned
6.1.7 Local oscillator

(7 × 1) (7)

6.2 This circuit mixes the output of the RF amplifier with that of the oscillator.✓✓
The output is the sum and difference of the two frequencies.✓ (3)
[10]

QUESTION 7

7.1
- Oscilloscope
- Multimeter
- Signal generator
- Signal tracer
- Signal injector

(Any 4 × 1) (4)

7.2

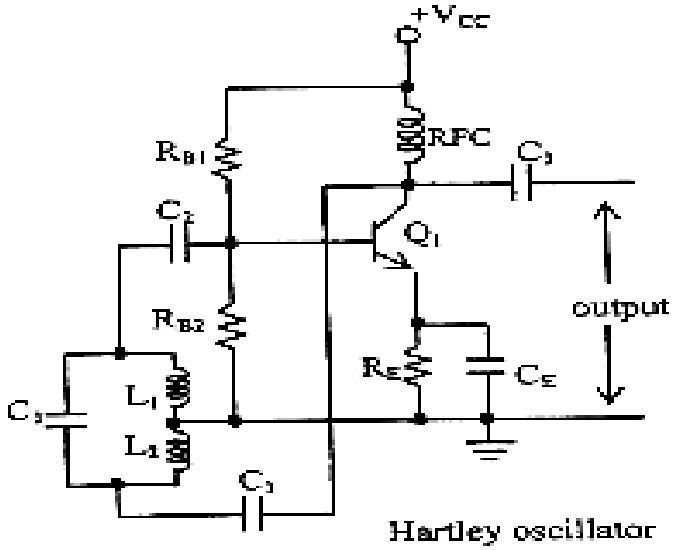

(½ mark for each component) (6)
[10]

QUESTION 8

8.1 False
8.2 True
8.3 False
8.4 True
8.5 False
8.6 False
8.7 True
8.8 True
8.9 False
8.10 True

(10 × 1) **[10]**

TOTAL: 100

Copyright reserved