higher education & training

Department:
Higher Education and Training
REPUBLIC OF SOUTH AFRICA

MARKING GUIDELINE

NATIONAL CERTIFICATE

RADIO THEORY N2

14 April 2021

This marking guideline consists of 6 pages.

Copyright reserved

QUESTION 1

1.1 Time taken for a waveform to complete one cycle of 360° (2)

1.2 $C_1 = 0,2\ \mu F$ $C_2 = 800\ nF$

$C_T = C_1 + C_2$

$= 0,2 \times 10^{-6} + 800 \times 10^{-9}$ ✓

$= 1\ \mu H$ ✓✓ (3)

1.3 Ability of inductor to oppose flow of alternating current (2)

1.4 $V_{Ave.} = 0,637 \times V_{Max}$

$191,1 = 0,637 \times V_{Max}$ ✓

$V_{Max} = \frac{191,1}{0,637}$

$= 300$ volts ✓✓ (3)

1.5 1.5.1 $XL = 2\pi fL$

$XL = 2\pi 50 \times 20 \times 10^{-3}$ ✓

$= 6,28\ \Omega$ ✓

1.5.2 $X_C = \frac{1}{2\pi fC}$

$X_C = \frac{1}{2\pi x50x220x10^{-6}}$ ✓

$X_C = 14,47\ \Omega$ ✓

1.5.3 $Z = \sqrt{R^2 + (X_L - X_c)^2}$

$Z = \sqrt{10^2 + (6,28 - 14,47)^2}$ ✓

$= 12,93\ \Omega$ ✓

1.5.4 $I = \frac{V}{Z}$

$= \frac{12}{12,93}$ ✓

$= 0,93$ amps ✓

1.5.5 Phase angle $= \cos^{-1}\frac{R}{Z}$

$= \cos^{-1}\frac{10}{12,93}$ ✓

$= 39,34°$ ✓

(5 × 2) (10)
[20]

QUESTION 2

2.1
- No parallax errors
- More accurate
- More sensitive
- Stronger
- High input impedance
- Auto-ranging
- Overload indicator
- Reverse polarity indicator
- Do zero need when measuring resistance (Any 6 × 1) (6)

2.2 R_{ni} = 200 Ω

$$R_{SH} = \frac{I_m x R_m}{I_T - I_m}$$

$$R_{SH} = \frac{1x10^{-3} x200}{50x10^{-3} - 1x10^{-3}} \checkmark$$

$$R_{SH} = \frac{0,2}{49x10^{-3}} \checkmark$$

= 4,08 Ω✓ (3)

2.3 Changes brightness of trace on screen (2)

2.4 T = no. of div. × time/div

T = 5 × 3 µs✓

= 15 µs✓

$$\text{Frequency} = \frac{1}{\text{Period}} = \frac{1}{15x10^{-6}} \checkmark$$

Frequency = 66,67 kHz✓ (4)

[15]

QUESTION 3

3.1

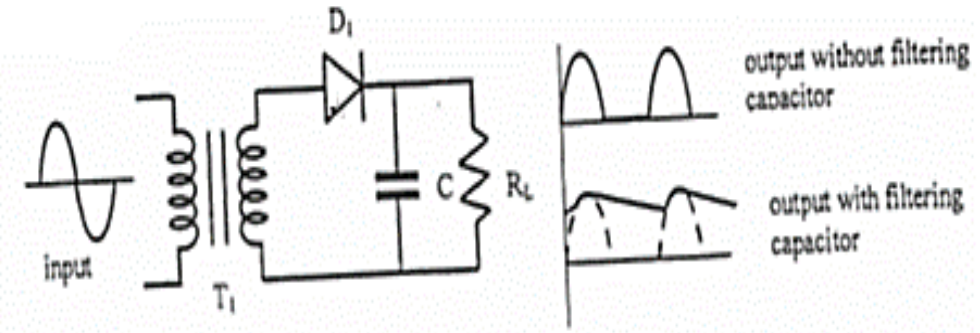

ONE mark for each component and waveform (7)

3.2 By adjusting the reverse bias voltage✓ the junction capacitance changes. The higher the reverse bias, the wider the depletion region and the capacitance of the diode decreases.✓ The lower the reverse bias, the smaller the depletion region and the capacitance of the diode increases.✓ (3)

[10]

QUESTION 4

4.1

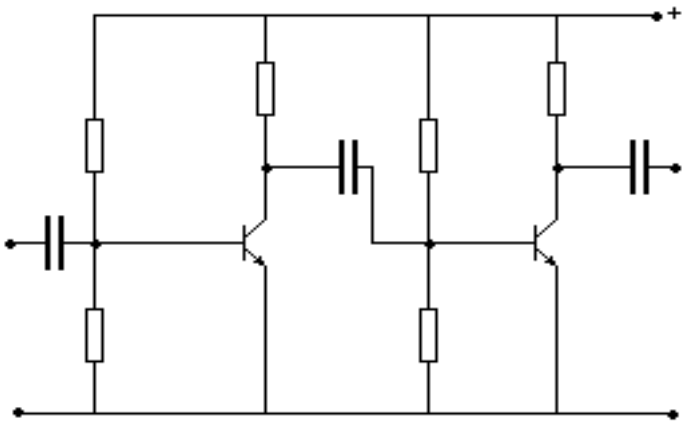

(½ for each component and polarity) (6)

4.2
- Common emitter
- Common base
- Common collector (3)

4.3
- Electronic switch
- Amplifier (2)

4.4

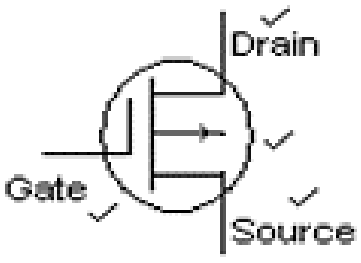

(4)

[15]

QUESTION 5

5.1

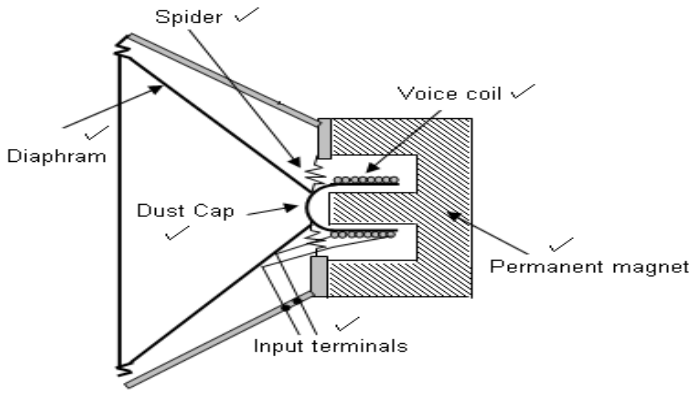

(6)

5.2 Advantages:

- Best frequency response
- High quality

Disadvantages:

- Very expensive
- Requires external supply (4)

[10]

QUESTION 6

6.1 The antenna receives the incoming RF signal✓ which converts the electromagnetic energy of the wave to an electrical current.✓

6.2 Selectivity is the ability of a receiver to receive✓ one signal and reject✓ all other signals.

6.3 In AM the amplitude of a carrier is made to vary✓ in accordance with✓ the audio signal.

6.4 The mixer receives the incoming RF signal as well as the signal from the oscillator✓ and beats them to produce signals equal to the sum and the difference of the two.✓

6.5 The detector demodulates✓ the IF signal to produce the original AF signal.✓

OR

The detector extracts AF from RF and gets rid of RF.

(5 × 2) **[10]**

QUESTION 7

7.1
- Inject audio signal into input of amplifier✓
- Check input and output of each stage for amplification using oscilloscope✓✓
- Stage with no amplification or signal disappearing is faulty stage✓

OR

Connect oscilloscope to output of amplifier and inject audio signal into input of each stage. Signal disappearing indicates faulty stage (4)

7.2

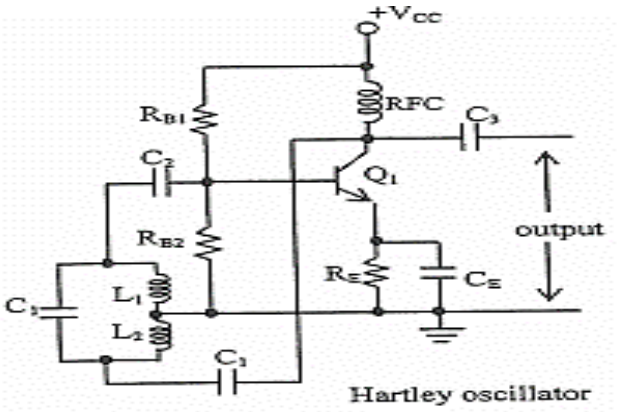

(½ for each component) (6)
[10]

QUESTION 8

8.1 True
8.2 True
8.3 False
8.4 False
8.5 True
8.6 False
8.7 True
8.8 True
8.9 False
8.10 True

(10 × 1) **[10]**

TOTAL: 100

Copyright reserved