higher education & training

Department:
Higher Education and Training
REPUBLIC OF SOUTH AFRICA

T1510**(E)**(A6)T

NATIONAL CERTIFICATE

RADIO THEORY N2

(11040862)

6 April 2018 (X-Paper)
09:00–12:00

This question paper consists of 6 pages and a formula sheet of 2 pages.

Copyright reserved

DEPARTMENT OF HIGHER EDUCATION AND TRAINING
REPUBLIC OF SOUTH AFRICA

NATIONAL CERTIFICATE
RADIO THEORY N2
TIME: 3 HOURS
MARKS: 100

INSTRUCTIONS AND INFORMATION

1. Answer ALL the questions.
2. Read ALL the questions carefully.
3. Number the answers according to the numbering system used in this question paper.
4. Write neatly and legibly.

Copyright reserved

QUESTION 1

1.1 A RLC circuit consists of a 220 μF capacitor in series with a 20 mH coil with a resistance of 5 Ω, connected across a 100 V/50 Hz supply.

Calculate the following:

1.1.1 The capacitive reactance

1.1.2 The inductive reactance

1.1.3 The impedance of the circuit

1.1.4 The current flow in the circuit

1.1.5 The voltage drop across the resistor

1.1.6 The voltage drop across the capacitor

1.1.7 The voltage drop across the inductor

1.1.8 The phase angle

(8 × 2) (16)

1.2 Explain the differences between *direct current* and *alternating current*. (2 × 2) (4)

[20]

QUESTION 2

2.1 A multimeter is a very popular testing device.

Name SIX different measurements or tests that a multimeter can perform. (6)

2.2 An oscilloscope displays an AC signal (one cycle) that covers 4 vertical divisions and 6 horizontal divisions.
The volts/division control is set to 2 V/division.
The time/division control is set to 2mSeconds/division.

Calculate the following:

2.2.1 Peak-to-peak voltage (2)

2.2.2 Frequency (4)

2.3 Name THREE forms of damping of a moving-coil meter (3)

[15]

Copyright reserved

QUESTION 3

3.1 What is the function of the diode in a power supply? (2)

3.2 Choose a description from COLUMN B that matches a word or term in COLUMN A. Write only the letter (A–E) next to the question number (3.2.1–3.2.5) in the ANSWER BOOK.

COLUMN A	COLUMN B
3.2.1 Atom	A atomic number of 14
3.2.2 Silicon	B trivalent
3.2.3 Doping	C smallest part of an element
3.2.4 Intrinsic	D introduction of impurities
3.2.5 Aluminium	E pure

(5)

3.3 State TWO conditions that must be met in order to allow current to flow across a PN-junction. (2)

3.4 Give the typical barrier potential for germanium diodes. (1)

[10]

QUESTION 4

4.1 Study the sketch of an electronic circuit diagram in FIGURE 1 below and answer the questions.

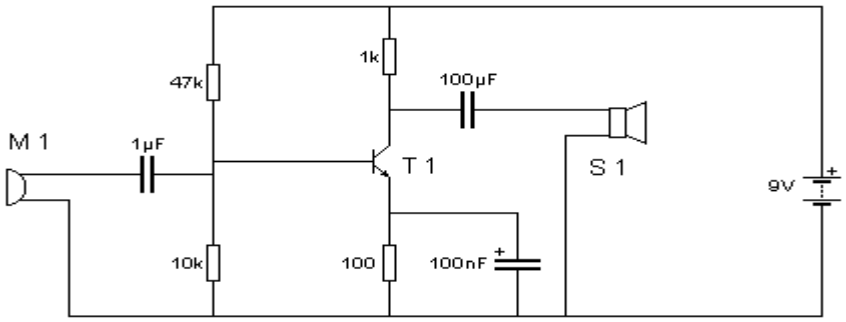

FIGURE 1

4.1.1 Identify the circuit in FIGURE 1. (1)

4.1.2 What is the function of T1? (1)

4.1.3 What is the function of the 1k resistor? (1)

4.1.4 What is the function of the component labeled 100 µF? (1)

4.1.5 Briefly explain the function of the combination of the 47k and 10k resistors. (2)

4.1.6 What is the function of the 100 Ω resistor? (1)

4.1.7 What is the function of M1? (2)

4.1.8 What is the function of S1? (2)

4.2 Make a neat, labelled sketch of the construction of an N-channel JFET. (4)
[15]

QUESTION 5

5.1 What is the main construction difference between a *mains transformer* and an *auto-transformer*? (2)

5.2 Make a neat, labelled drawing of a ribbon microphone, and give ONE of its advantages. (5)

5.3 Give THREE advantages of a moving-coil speaker. (3)
[10]

QUESTION 6

6.1 Draw a neat, labelled block diagram of a tuned radio-frequency receiver. (6)

6.2 Name, and explain, the TWO basic sections of a radio communication system. (4)
[10]

QUESTION 7

7.1 List FIVE steps involved in fault-finding a fault in a radio receiver. (5)

7.2 Two or more amplifier stages are coupled to increase the overall gain.

Draw a circuit diagram of a RC-coupling amplifier. (5)
[10]

QUESTION 8

Indicate whether the following statements are TRUE or FALSE. Choose the answer and write only 'true' or 'false' next to the question number (8.1–8.10) in the ANSWER BOOK.

8.1 At resonance in a series RLC circuit the inductive reactance is equal to capacitive reactance.

8.2 Current divides in a parallel circuit.

8.3 The average value of a 10 V peak-to-peak sine wave is 6,37 V.

Copyright reserved

8.4 The vertical shift on an oscilloscope changes the amplitude of the wave displayed.

8.5 Valence electrons are electrons found in the outer band of an atom.

8.6 The dielectric of a capacitor is a conductor.

8.7 Current flows when a diode is forward biased.

8.8 Field-effect transistors are voltage-controlled devices.

8.9 Transformers change AC to DC.

8.10 The detector in a radio removes the AF from the RF carrier wave.

(10 × 1) **[10]**

TOTAL: 100

Copyright reserved

FORMULA SHEET

RADIO THEORY N2

Capacitors, Resistors and Inductors

$$\frac{1}{C_T} = \frac{1}{C_1} + \frac{1}{C_2} + ...$$

$$C_T = C_1 + C_2 + ...$$

$$R_T = R_1 + R_2 + ...$$

$$\frac{1}{R_T} = \frac{1}{R_1} + \frac{1}{R_2} + ...$$

$$\frac{1}{L_T} = \frac{1}{L_1} + \frac{1}{L_2} + ...$$

$L_T = L_1 + L_2 + \ldots$

$$R_{SH} = \frac{I_m x R_m}{I_T - I_m}$$

$$R_S = \frac{V}{I_m} - R_m$$

Instantaneous voltage across a capacitor

$$V_C = V\left(1 - e^{\frac{-t}{RC}}\right)$$

Initial charging current through a capacitor

$$i = \frac{V}{R} \times e^{\frac{-t}{RC}}$$

Time constant $\tau = R \times C$

Charge of capacitor $Q = C \times V$

AC THEORY

Inductive reactance $X_L = 2.\pi.F.L$

Capacitive reactance $X_C = \frac{1}{2.\pi.F.C}$

Copyright reserved

Impedance for RL, RC and RLC circuits

$$Z = \sqrt{R^2 + X_L{}^2} : \; Z = \sqrt{R^2 + X_C{}^2} : \; Z = \sqrt{R^2 + (X_L \approx X_C)^2}$$

Circuit current for RL, RC and RLC circuits

$$I_T = \frac{V_T}{X_L} : \qquad I_T = \frac{V_T}{X_C} : \qquad I_T = \frac{V_T}{Z}$$

Voltage drop across components

$$V_R = I \times R : V_L = I \times X_L : V_C = I \times X_C$$

Power factor $\cos\theta = \frac{R}{Z}$

Phase angle $\phi = \cos^{-1}\frac{R}{Z}$

Resonant frequency $f_r = \frac{1}{2.\pi.\sqrt{LC}}$

Q-factor $Q = \frac{1}{R}\sqrt{\frac{L}{C}}$

OHM'S LAW

Voltage drop $V = I \times R$

Circuit current $I = \frac{V}{R}$

OSCILLOSCOPE CALCULATIONS

Period = Time/Division x Horizontal divisions

Amplitude = Volts/Division x \Vertical divisions

Frequency $= \frac{1}{\text{Period}}$

RMS voltage = 0,707 × Peak

Average voltage = 0,637 × Peak

Voltage (Peak to Peak) = 2 × Peak

Copyright reserved