higher education & training

Department:
Higher Education and Training
REPUBLIC OF SOUTH AFRICA

MARKING GUIDELINE

NATIONAL CERTIFICATE

RADIO THEORY N1

(11041841)

5 APRIL 2018

This marking guideline consists of 6 pages.

Copyright reserved

QUESTION 1

1.1 False
1.2 True
1.3 False
1.4 False
1.5 True
1.6 False
1.7 False
1.8 True
1.9 True
1.10 True (10 × 1) **[10]**

QUESTION 2

2.1

$$A = \frac{\pi.D^2}{4}$$

$$A = \frac{\pi.0,2^2}{4} \checkmark = 0.000000031m^2\checkmark$$

$$R = \frac{\rho.\ell}{A} \checkmark$$

$$R = \frac{0,0017x10^{-6}x1}{0,000000031} \checkmark = 0,054\Omega\checkmark$$

(5)

2.2 Electrons that have broken away from an atom. (2)

2.3 The current flowing into a junction point✓ of a circuit is equal✓ to the current leaving the junction.✓ (3)
[10]

QUESTION 3

3.1

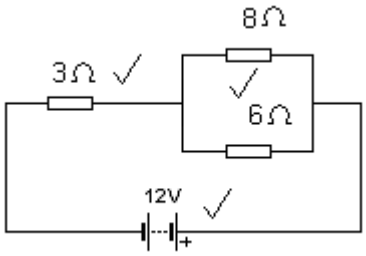

(3)

3.2 $\frac{1}{Rp} = \frac{1}{R_1} + \frac{1}{R_2}$

$\frac{1}{Rp} = \frac{1}{8} + \frac{1}{6}$ = 0,292✓

R_p = 3,429Ω✓

R_T = 3 + 3,429 = 6,429Ω✓ (3)

3.3 $I = \frac{V}{R}$

$I = \frac{12}{6,429}$ = 1,867 amps✓✓

(2)

3.4 V = I × R = 3 x 1,867✓ = 5,6 volts✓ (2)
[10]

QUESTION 4

4.1 When current flows in a coil✓ a magnetic field is formed.✓ If this magnetic field cuts another coil✓ an EMF is induced in that coil.✓ (4)

4.2
- The direction of the lines of flux is a north-seeking pole.
- Each line forms a closed path.
- They never intersect.
- They always try to shorten themselves.
- Lines that are in the same direction will repel each other. (Any 4 × 1) (4)

4.3 North pole✓ and south pole.✓ (2)
[10]

QUESTION 5

5.1

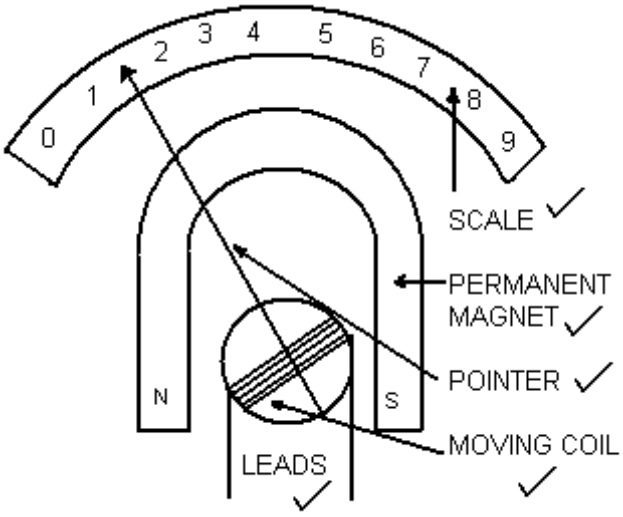

(5)

5.2 $$Rp = \frac{Im\,xRm}{It - Im}$$

$$Rp = \frac{10x10^{-3}\,x100}{100x10^{-3} - 10x10^{-3}}$$ ✓

R_p = 11,11Ω✓ (2)

5.3
- Always connect ampere meter in series
- Observe correct polarity
- Start from the highest range (3)

[10]

QUESTION 6

6.1 $$F = \frac{1}{t} = \frac{1}{10 \times 10^{-3}}$$ ✓

= 100Hz✓ (2)

6.2

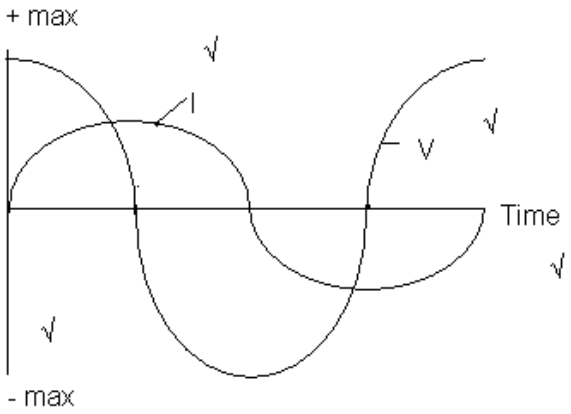

(4)

6.3 Coil,✓ magnet✓and slip rings✓ (3)

6.4 Hertz (1)
[10]

QUESTION 7

7.1

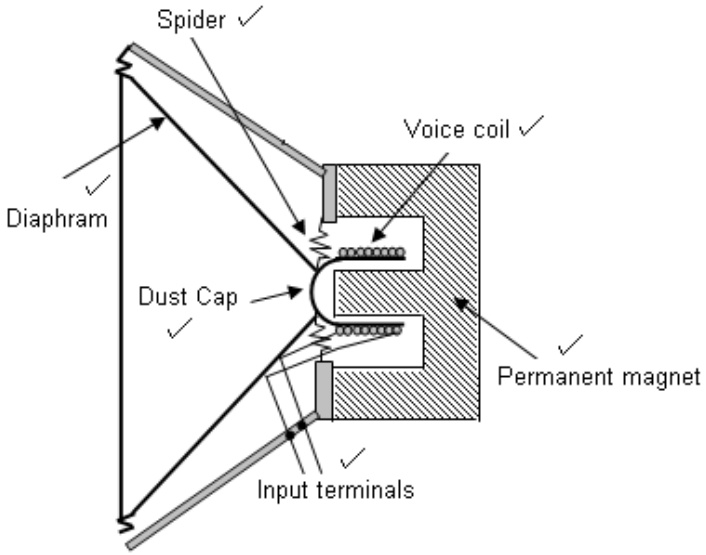

(6)

7.2 300 ×10^6✓ meters/second✓ (2)

7.3 The amplitude of the carrier varies in accordance with the AF signal. (2)
[10]

QUESTION 8

8.1 The base✓ controls the emitter collector current.✓
The collector✓collects the charge carriers.✓
The emitter✓ emits the charge carriers.✓ (3 × 2) (6)

8.2

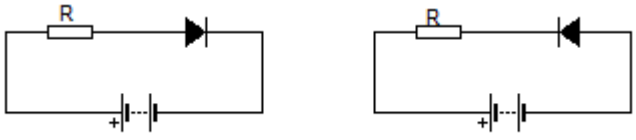

(2 × 2) (4)
[10]

QUESTION 9

9.1 9.1.1 

9.1.2 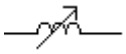

9.1.3 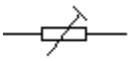

(3 × 1) (3)

9.2 2✓ 7✓ 3✓ 5% ✓ (4)

9.3
- Area of the plates
- Distance between the plates
- Dielectric between the plates

(3)
[10]

QUESTION 10

10.1

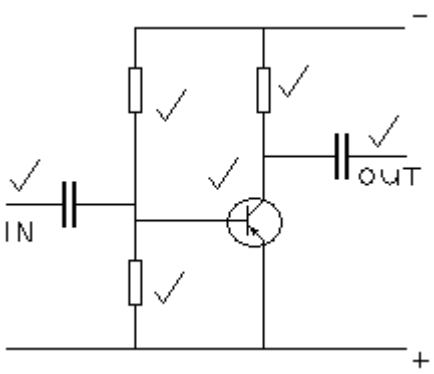

(6)

10.2

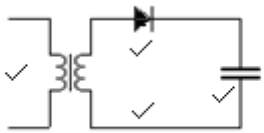

(4)
[10]

TOTAL: 100

Copyright reserved