higher education & training

Department:
Higher Education and Training
REPUBLIC OF SOUTH AFRICA

MARKING GUIDELINE

NATIONAL CERTIFICATE

QUANTITY SURVEYING N5

21 April 2021

This marking guideline consists of 8 pages.

Copyright reserved

SECTION A

QUESTION 1.1

			83,50 86,80 I 85,70 83,50 339,50 ÷ 4 = 84,875 Less 87,500 - 2,625 m✓ 83,50 85,70 J 83,50 252.70 ÷ 3 = 84,233 Less 87,500 - 3,267 m✓ 86,80 91,30 G 89,50 85,70 353,30 ÷ 4 = 88,325 Less 87,500 0,825 m✓ 85,70 89,50 H 87,80 83,50 346,50 ÷ 4 = 86,625 Less 87,500 - 0,875 m✓ 91,30 90,50 D 87,30 89,50 358,60 ÷ 4 = 89,650 Less 87,500 2,150 m✓ 89,50 87,30 E 86,20 87,80 350,80 ÷ 4 = 87,700 Less 87,500 0,200 m✓ (1)				90,50 92,70 C 91,20 87 30 361,70 ÷ 4 = 90,425 Less 87,500 2,925 m✓ 87,30 91,20 B 88,30 86,20 353,00 ÷ 4 = 88,250 Less 87,500 0,750 m✓ 86,20 88,30 A 87,60 84,00 346,10 ÷ 4 = 86,525 Less 87,500 - 0,975 m✓ 87,80 86,20 F 84,00 85,10 343,10 ÷ 4 = 85,775 Less 87,500 - 1,725 m✓ Add reference sketches = 1 (2)

			Open face bulk excavation in earth Cube × 115 × 115 = m^3				
	0,83		G				Allow 5% of excav. mat. for hard rock
	2,15		D				
	0,20		E				
	1,93		C		M³		
	0,75		B				
	115,00		I				
	86,25		Fill and compact soil excavation material on site				
0.5	2,63		J				
	115,00						
	57,50		H				
	3,27						
	115,00						
	115,00		A				
	0,88						
	115,00						
	57,50		F				
	0,98						
	115,00						
	57,50						
	1,73						
			Allow 10% for soft rock				
	M³						
			(3)				(4)

(45)

QUESTION 1.2: SQUARING

	✓ 0,83 2,15 0,20 1,93 0,75	✓ 5,86	Open face bulk excav. in earth Cubed × 115 × 115 = 77 498 M³ ✓ ✓ ✓ ✓ ✓	0,5	115,00 86,25 2,63 115,00 57,50 0,83 115,00 115,00 0,88 115,00 57,50 0,98 115,00 57,50 1,73	26 086 2 744,18 11 638 6 480,25 11 439,63 58 388,06	Fill and compact soil excav. material on site M³ **NOTE:** Vertical transfer lines must be different colours indicating different checkers.
			(5)				(6)

QUESTION 1.2: ABSTRACTING

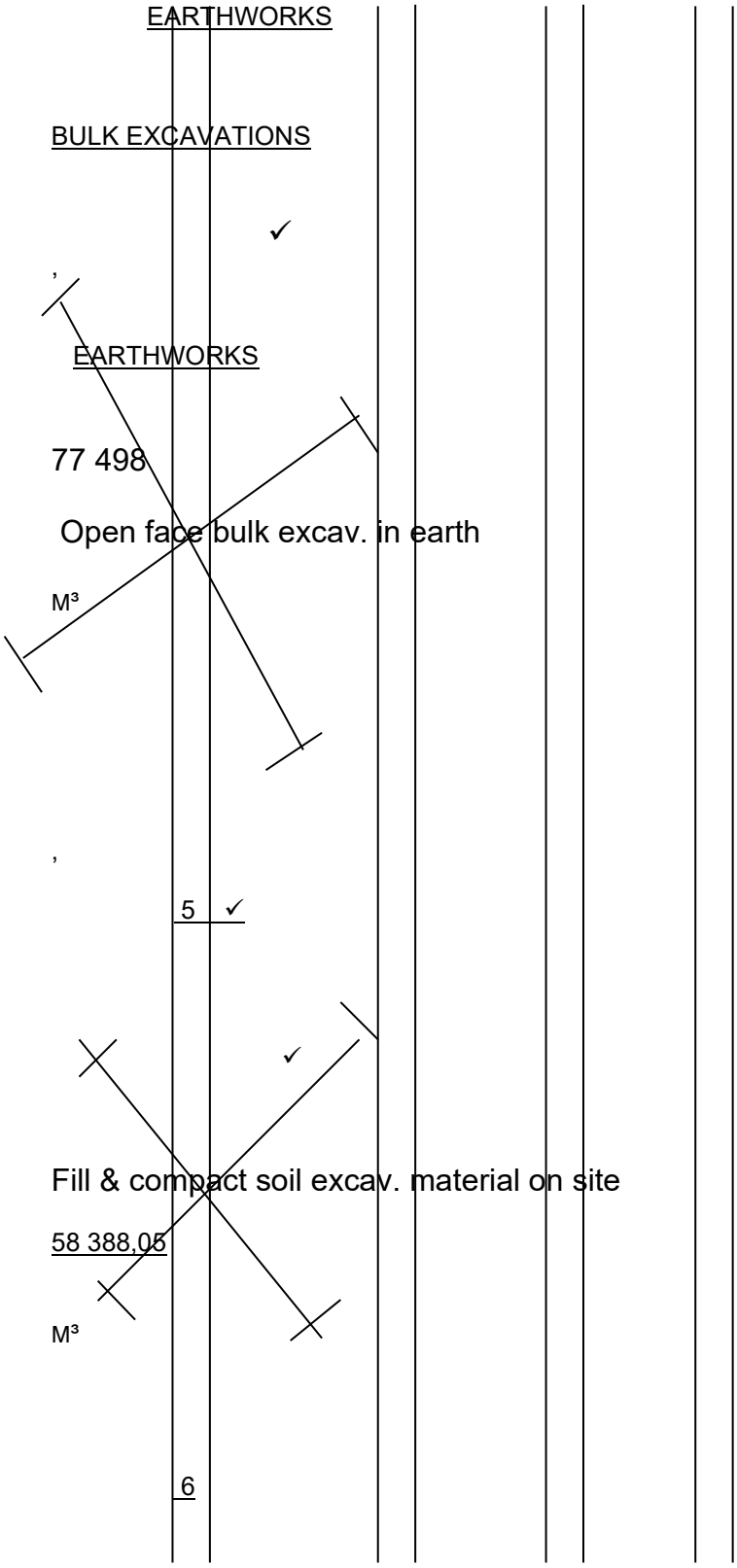

MARK ALLOCATION	
Section	2
Trade	1
Unit	1
Col,	1
Page reference	1
Transfers	2 = 8

NOTE:
Diagonal lines must be different colours indicating different checkers.

(8)

QUESTION 1.3: BILLING

	EARTHWORKS✓			
	✓ BILL No, 1			
	BULK EXCAVATIONS✓			
✓ 1	✓ Open face bulk excavations in earth✓	M^3	77 498	
2	Fill and compact soil excavations on site	M^3	58 388	
	TOTAL CARRIED TO SUMMARY✓		R	

MARK ALLOCATION

Section	1
Trade	1
Bill no.	1
Item no.	1
Description	1
Units	1
Summary	1 = 7

(7)
[60]

TOTAL SECTION A: 60

SECTION B

QUESTION 2

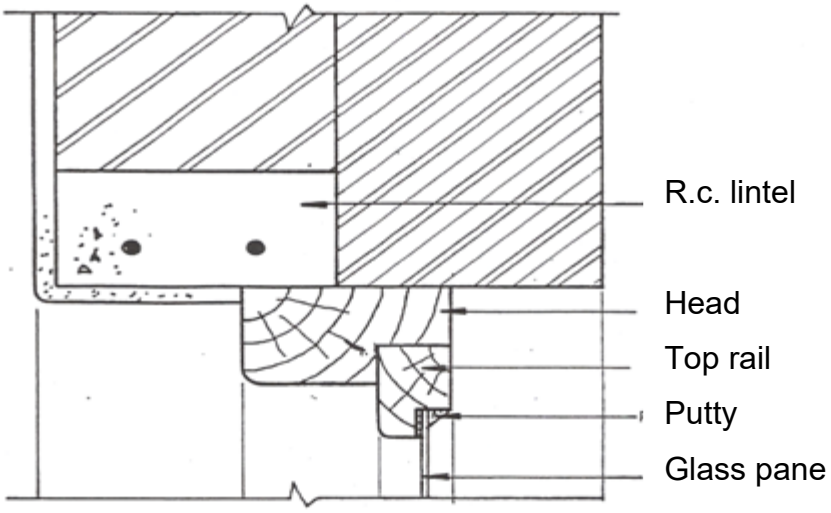

SECTION THROUGH WINDOW HEAD
(Appropriate scale)

ransom:

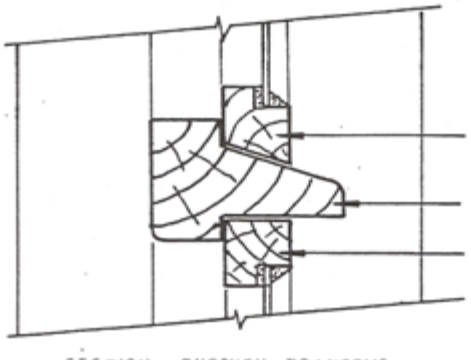

SECTION THROUGH TRANSOM
(Appropriate scale)

[10]

QUESTION 3

Preliminaries	8/12 × R150 000,00	R100 000,00✓
Earthworks	100%	R85 300,00✓
Concrete, Formwork, Reinforcement	100%	R550 220,00✓
Masonry	90% × R220 500,00	R198 450,00✓
Glazing	80% × R24 300,00	R19 440,00✓
Ironmongery	55% × R8 520,00	R4 686,00✓
Plumbing		R7 000,00✓
Builder's work complete		R965 096,00✓
Materials on site		R8 600,00✓
		R973 696,00✓
Retention 10%		R97 369,60✓
		R876 326,40✓
Less previous payments		R824 420,75✓
Due to the contractor		R51 905,65✓✓ **[15]**

QUESTION 4

- Study the drawings with specifications.✓
- Take-off, the recording of dimensions and descriptions of all labour and material items.✓
- Square and check side casts and square and check all the series of dimensions within a group which must relate to the same unit of measurement.✓✓
- Do abstracting which involves the sorting, grouping together of identical items and transferring the dimensions onto abstract paper and check the abstracting.✓✓
- Cast and reduce which involves the totalling of the quantities in the deduction and addition columns.✓✓
- Work up the abstracting and billing and check the bills.✓
- Type and read through the bill of quantities.✓ **[10]**

QUESTION 5

5.1
- Names, addresses, telephone numbers, etc. of the employer and consultants
- Particulars of the contract documents
- Requirements with regard to sureties or guarantees
- Responsibility with regard to the management and execution of the works
- Plant and temporary works such as roads, sheds, offices and notice boards

(Any other relevant items) (Any 4 × 1) (4)

5.2
- Unit of measurement = item (1)

[5]

TOTAL SECTION B: 40
GRAND TOTAL: 100

Copyright reserved