higher education & training

Department:
Higher Education and Training
REPUBLIC OF SOUTH AFRICA

MARKING GUIDELINE

NATIONAL CERTIFICATE

NOVEMBER EXAMINATION

POWER MACHINES N6

18 NOVEMBER 2014

This marking guideline consists of 14 pages.

Copyright reserved

QUESTION 1

1.1 $\eta_{comp} = \frac{T2' - T1}{T2 - T1} \times 100\%$

$0,85 = \frac{T2' - 288}{515 - 288}$

$T_2' = 480,95$ kPa

$Q_{2-3} = mCp\,(T_3 - T_2)$

$643 = 1 \times 1\,((T_3 - 515)$

$T_3 = 1158$ K

$P_2 = P_1 (\frac{T2'}{T1})^{\frac{\gamma}{\gamma-1}}$

$= 103,4 (\frac{480,95}{288})^{\frac{1,4}{0,4}}$

$P_2 = P_3 = 622,3$ kPa

$T_4' = T_3 (\frac{p4}{p3})^{\frac{\gamma-1}{\gamma}}$

$= 1158 (\frac{103,4}{622,3})^{\frac{0,4}{1,4}}$

$= 693,43$ K

$\eta_{turbine} = \frac{T3 - T4}{T3 - T4'} \times 100\%$

$0,82 = \frac{1158 - T4}{1158 - 693,43}$

$T_4 = 777,06$ K (9)

P(kPa

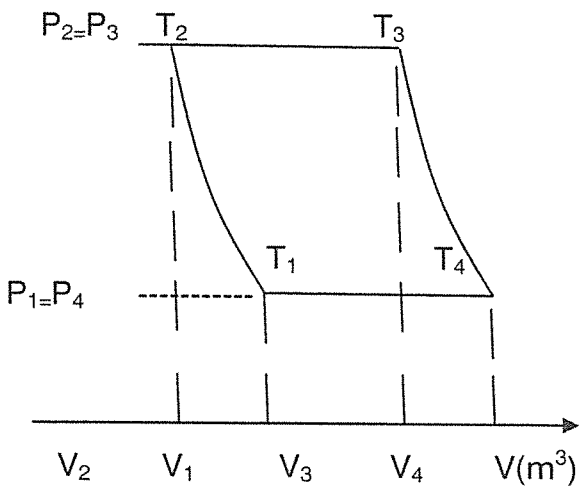

1.2 $P_2 = P_3 = 622,3$ kPa (3)

Copyright reserved

1.3 $\frac{T2}{T1} = (\frac{P2}{P1})^{\frac{nc-1}{nc}}$

$= \ln \frac{515}{288} = \ln (\frac{622,3}{103,4})^{\frac{nc-1}{nc}}$

$\ln 1,7882 = \ln(6,0184)^{\frac{nc-1}{nc}}$

$\ln 1,7882 = (\frac{nc-1}{nc}) \ln 6,0184$

$nc = \frac{-1,7948}{-1,2078} = 1,48$

$\frac{T3}{T4} = (\frac{P3}{P4})^{\frac{ne-1}{ne}}$

$\ln \frac{1158}{777,06} = \ln (\frac{622,3}{103,4})^{\frac{ne-1}{ne}}$

$= \frac{(ne-1)}{ne} \ln \frac{622,3}{103,4}$

$0,3989\ ne = 1,7948\ ne - 1,7948$

$ne = \frac{-1,7948}{-1,3959}$

$ne = 1,29$ (6)

1.4 1.2 $Q_{4-1} = mCp\ (T_1 - T_4)$

$= 1 \times 1\ (288 - 777,06)$

$= -489,06$ kJ/kg (2)

[20]

Copyright reserved

QUESTION 2

2.1 $BP = \frac{2\pi NT}{60}$

$= \frac{2\pi \times 2000 \times 1.067 \times 15 \times 10}{60}$

$= 33,52$ Kw

$IP = \frac{BP}{\eta \text{ mech}}$

$= \frac{33,52}{0.8}$

$= 41, 9$ kW (6)

2.2 $BT\ \eta = \frac{BP}{CV \times m/s} \times 100\%$

$0, 25 = \frac{33,52}{44200 \times m/s}$

$m = 0, 00303$ kg/s

$m = 0, 00303 \times 60$ kg/ min

$m = 0, 182$ kg/min (4)

2.3 $m_{exhaust} = mf \times 20$ ∴ A/F ratio = 19 :1

$= 0,182 \times 20$

$= 3, 64$ kg/min

$Q_{exhaust} = m_{exhaust} \times Cp_{exh} \times \Delta T$

$= 3, 64 \times 1, 05 \times 520$

$= 1\ 987, 44$ kJ/min (4)

Copyright reserved

2.4 Heat Balance Table

Q fuel (kJ/min)	Q_{in} (kJ/min)		% Supplied
Q= mf x Cv = 0,182 x 44200 = 8044,4 kJ/min	BP = 33,52 x 60	2011,2	25
	Friction = (IP –BP) = (41,9 – 33,52) x 60	502,8	6,25
	Coolant	1987,44	24,71
	Exhaust	1987,44	24,71
	Remainder	1555,52	19,34
8044,4	Total	8044,4	100

(6)
[20]

Copyright reserved

QUESTION 3

3.1 scale = $\frac{500}{13,4}$

= 37, 3 : 1

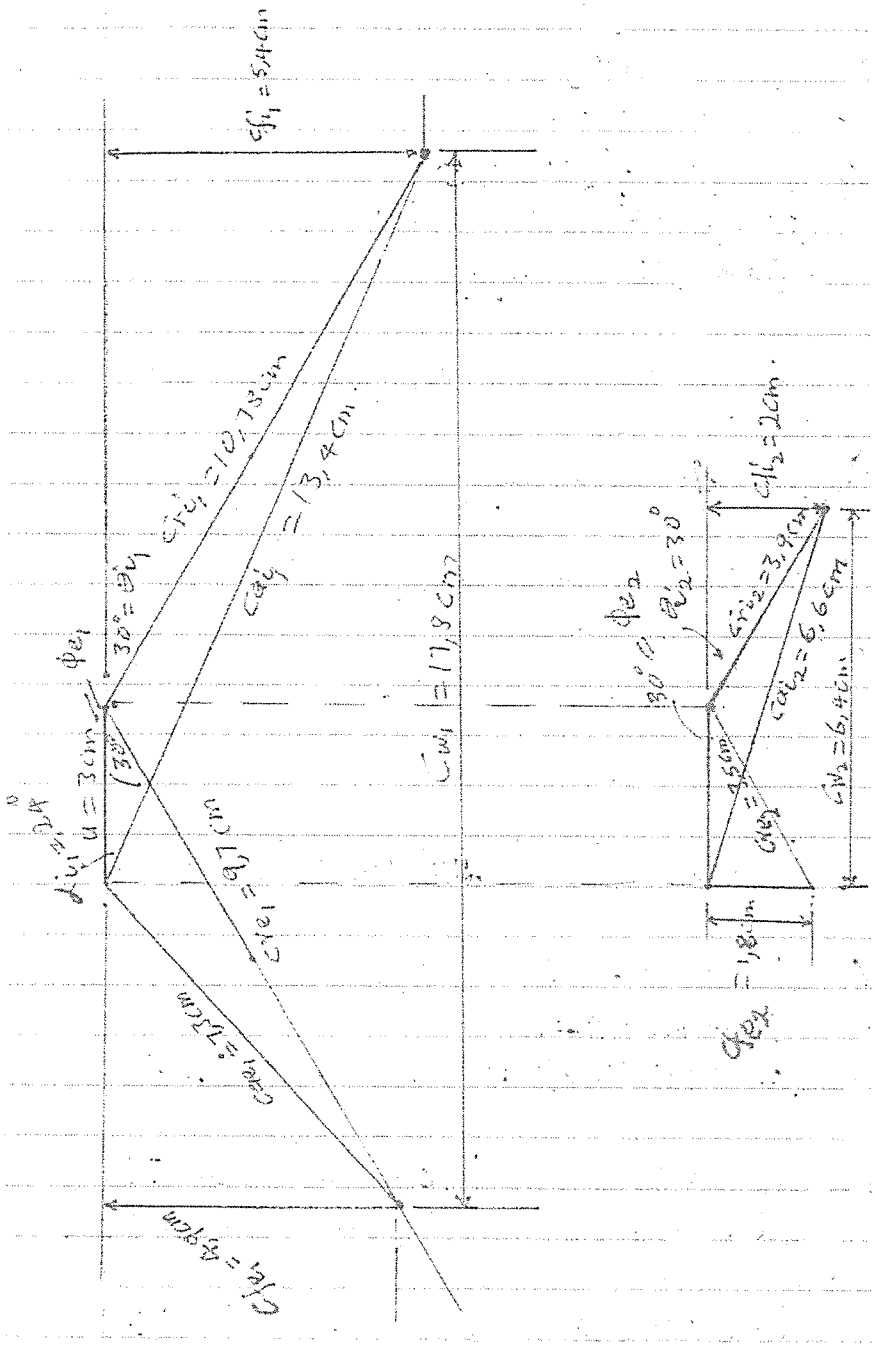

(10)

3.2 3.2.1 $U = 3 \times 37, 3$

$= 112$ m/s (1)

3.2.2 $\alpha i_1 = 24^{\circ}$ (1)

3.2.3 $Cfi_2 = 2$ cm x 37, 3

$= 74,6$ m/s (1)

3.2.4 $Cre_2 = 3, 5$ cm x 37, 3

$= 130, 6$ m/s (1)

3.2.5 $P = mu\ (Cw_1 + Cw_2)$

$= 1 \times 112\ (17, 8 + 6, 4) \times 37, 3$

$= 101, 09$ kW (3)

3.2.6 $\eta = \frac{2u\ (Cw_1 + Cw_2)}{Cai_1^2}$

$\eta = 2\frac{x\ 112\ (17,8 + 6.4\ )\ 37,3}{(500)^2}$

$= 80, 9\ \%$ (3)
[20]

Copyright reserved

QUESTION 4

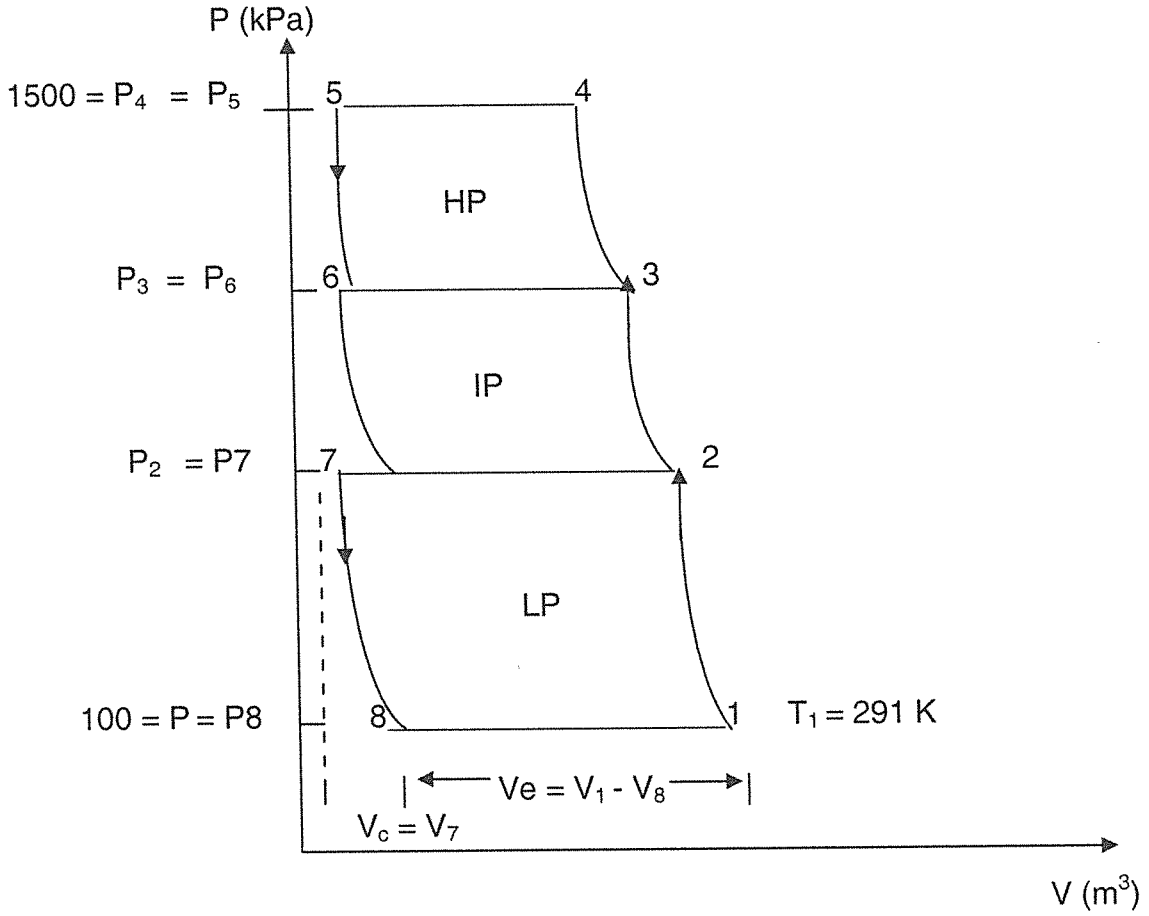

4.1 $k = \sqrt[x]{\frac{P4}{P1}} = \sqrt[3]{\frac{1500}{100}} = 2,466$

$k = \frac{P2}{P1}$ $\therefore$ $P_2 = 2,466 \times 100$

$= 246, 6$ kPa

$k = \frac{P3}{P2}$ $\therefore$ $P_3 = 2,466 \times 246, 6$

$= 608, 12$ kPa (5)

Copyright reserved

4.2 $2Vs_1 = \frac{\pi}{4} d^2 \times L = \frac{\pi}{4} (0,45)^2 \times 0,3 = 0,0477\ m^3$

$Vc_1 = 0.05.Vs_1 = 0,05 \times 0,0477 = 0,00239\ m^3$

$V_1 = Vc_1 + Vs_1 = 0,05.\ Vs_1 + Vs_1 = 1.05\ Vs_1$

$\therefore V_1 = 1,05 \times 0,0477 = 0,0501\ m^3$

$V_8 = V_7 (\frac{p7}{p8})^{\frac{1}{n}}$

$= 0,00239\ (2,466)^{\frac{1}{1,3}}$

$= 0,00479\ m^3$

$\therefore Ve_1 = V_1 - V_8$

$= 0,0501 - 0,00479$

$= 0,04531\ m^3$ (5)

4.3 $4.3T_4 = T_3 = T_2 = T_1 (\frac{p2}{p1})^{\frac{n-1}{n}}$

$= 291 (2,466)^{\frac{0,3}{1,3}}$

$= 358,39\ K$

$V_d = \frac{mRTd}{pd}$

$= \frac{1 \times 0,29 \times 358,39}{1500}$

$= 0,06929\ m^3$ (5)

4.4 $4.4W_d = \frac{x\ n\ mRT1}{n-1} [(\frac{p4}{p1})^{\frac{n-1}{nx}} - 1]$

$= \frac{3 \times 1,3 \times 1 \times 0,29 \times 291}{0,3} [(15)^{\frac{0,3}{3 \times 1,3}} - 1]$

$= 254,08\ kJ/kg$ (5)
[20]

Copyright reserved

QUESTION 5

5.1 $P_c = P_1 \left(\frac{2}{\gamma+1}\right)^{\frac{\gamma}{\gamma-1}} = 500 \left(\frac{2}{2,4}\right)^{\frac{1,4}{0,4}} = 264,14$ kPa

$T_c = T_1 \left(\frac{2}{\gamma+1}\right) = 810 \left(\frac{2}{2,4}\right) = 675$ K (4)

5.2 $V_c = \frac{RTc}{Pc} = \frac{0,288x675}{264,14} = 0,7359$ m^3/kg

$C_c = \sqrt{2000.Cp(T1 - Tc)}$

$Cc = \sqrt{2000x1,008(810 - 675)}$

$Cc = 521,69$ m/s

$A_c = \frac{mVc}{Cc} = \frac{1x0,7359}{521,69} = 0,00141$ m^2/kg $= 1\,410$ mm^2/kg (6)

5.3 $T_2' = T_1\left(\frac{P2}{P1}\right)^{\frac{\gamma-1}{\gamma}} = 810\left(\frac{143}{500}\right)^{\frac{0,4}{1,4}} = 566,45$ K

$\eta = \frac{T1 - T2}{T1 - T2'} = \frac{810 - T2}{810 - 566,45} = 0,92$

$\therefore T_2 = 585,93$ K (4)

5.4 $V_2 = \frac{RT2}{P2} = \frac{0,288 \times 585,93}{143} = 1,1801$ m^3/kg

$C_2 = \sqrt{2000.Cp(T1 - T2)} = \sqrt{2000x1,008(810 - 585,93)}$

$\therefore C_2 = 672,10$ m/s

$A_2 = \frac{mV2}{C2} = \frac{1x1,801}{672,1} = 0,00268$ m^2/kg

$= 2\,680$ mm^2/kg (6)
[20]

Copyright reserved

QUESTION 6

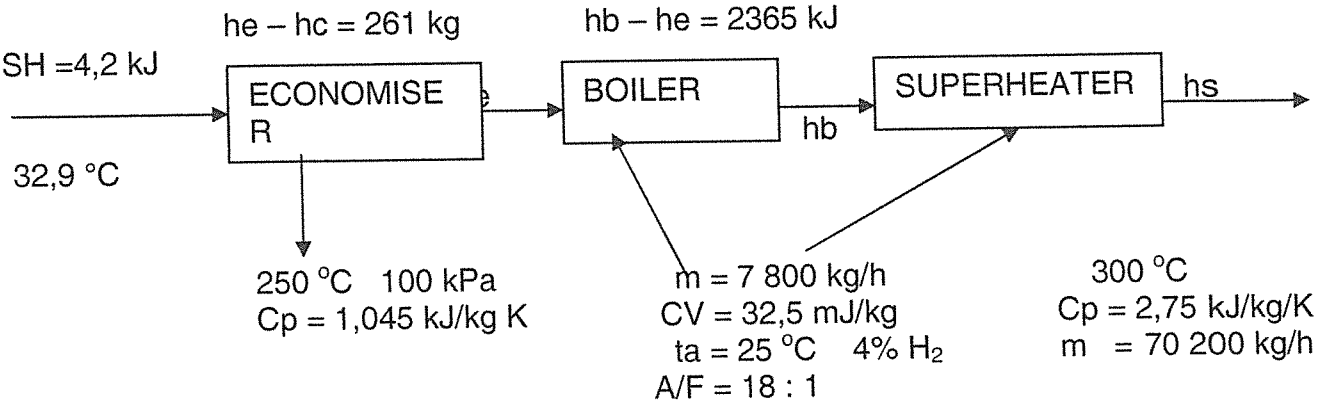

ms/kg of fuel $= \frac{70200}{7800} = 9$ kg

$h_e - h_c = \frac{2349}{9} = 261$ kJ

$h_b - h_e = \frac{21287}{9} = 2\,365$ kJ

6.1 @ 2 000 kPa and 300° C: $h_s = 3025$ kJ/kg

@ 3 000 kPa and 300° C: $h_s = 2\,995$ kJ/kg

$= 30$ kJ/kg

A 1000 kPa will decrease the enthalpy by 30 kJ/kg

A 500 will decrease the enthalpy by 15 kJ/kg

The superheat enthalpy at 2500 kPa will be 3025 – 15 = 3010 kJ/kg

$$\eta_{plant} = \frac{ms(hs - hc)}{mf \times CV} = \frac{70200(3010 - 4,2 \times 32,9)}{7800 \times 32500}$$

$= 79,53\%$ (5)

Copyright reserved

6.2 $h_e - h_c = 261$

$h_e = 261 + hc = 261 + 4,2 \times 32,9$

$= 399$ kJ/kg

$h_f = 399$ kJ /kg $t_s = 95, 2$ ° C

$h_b - h_e = 2365$

$h_b = 2365 + h_e = 2365 + 399$

$= 2764$ kJ/kg

$h_b = h_f + xhjg$ at 2500 kPa $\therefore$ $2764 = 962 + 1839\ x$

$\therefore$ $x = 0, 98$ (4)

6.3 Heat lost to moisturise = $M_m (h_s - h_f)$

$= 9 \times 0.04 (2975 - 105)$

$= 1\ 033, 2$ kJ/kg

(NB .1kg of H_2 requires 8 kg O_2 to form 9 kg H_2O) (3)

6.4 Heat lost to dry flue gas = m .Cp. Δt

$= (18 + 1 - 0, 36)\ 1,045\ (250 - 25)$

$= 4382,7$ kJ/kg (3)

6.5

Heat supplied	Heat to		%
Mf x CV = 32500 kJ	Steam = 9(3010 −138)	= 25 848	79,53 %
	Moisture	= 1 033,2	3,18 %
	Dry flue gases	= 4 382,7	13,49 %
	Radiation	= 1 236,1	3,8 %
		32 500	100 %

(5)
[20]

QUESTION 7

7.1

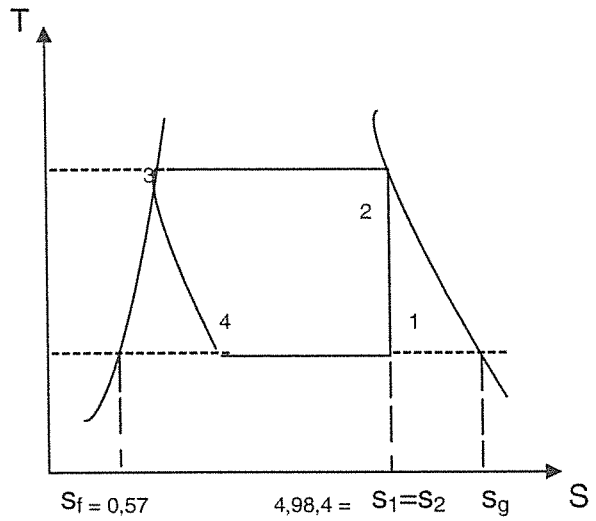

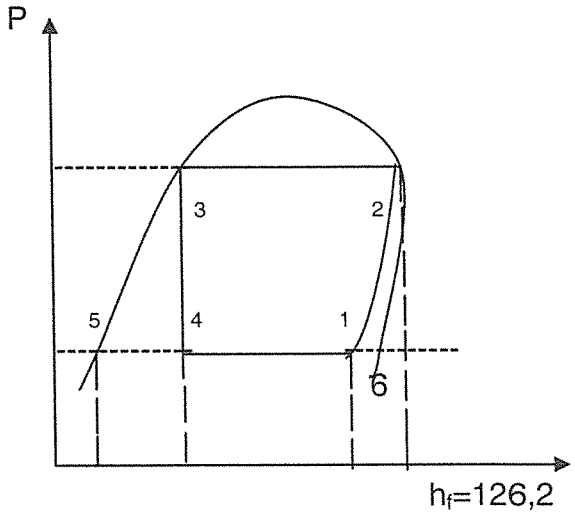

h_3=323,1 h_f h_2=1468,9 h (5)

7.2 7.2.1 $T_1 = T_4 = -12 + 273 = 261$ K

$T_2 = T_3 = 30 + 273 = 303$ K

From T – S diagram

$$q = \frac{Si - Sf}{Sg - Sf} = \frac{4,984 - 0,57}{5,504 - 0,57} = 0,895$$

From P – h diagram

$h_1 = h_f + q.hfg = 126,2 + 0,895 \times 1304,3$

$= 1293,55$ kJ/kg

$$\therefore \text{C.O.P} = \frac{h1 - h4}{h2 - h1} = \frac{1293,55 - 323,1}{1468,9 - 1293,5} = 5,533$$ (7)

Copyright reserved

7.2.2 7.2.2 $Q_{per\ kg\ of\ ice} = hfg + m \times Cp \times \Delta t$

$= 327 + 1 \times 4,187 \times (25 - 0)$

$= 431, 68\ kJ/kg$

$$\text{Refrigerating effect} = \frac{Q \text{per kg ice} \times m}{t}$$

$$= \frac{431,68 \times 1000}{24 \times 60 \times 60}$$

$= 4,996\ kJ/s$

$$\text{Work done} = \frac{\text{Refrigerating Effect}}{\text{C.O.P}}$$

$$= \frac{4,996}{5,533}$$

$= 0,903\ kW$ (8)
[20]

TOTAL: 100

Copyright reserved