higher education & training

Department:
Higher Education and Training
REPUBLIC OF SOUTH AFRICA

MARKING GUIDELINE

NATIONAL CERTIFICATE

POWER MACHINES N6

17 April 2020

This marking guideline consists of 13 pages.

Copyright reserved

QUESTION 1

1.1 $(L \times A) = V_s$

$$= \frac{\pi}{4} D^2 \times 1{,}228D$$

$$= \frac{1{,}228\ \pi\ D^3}{4} \checkmark$$

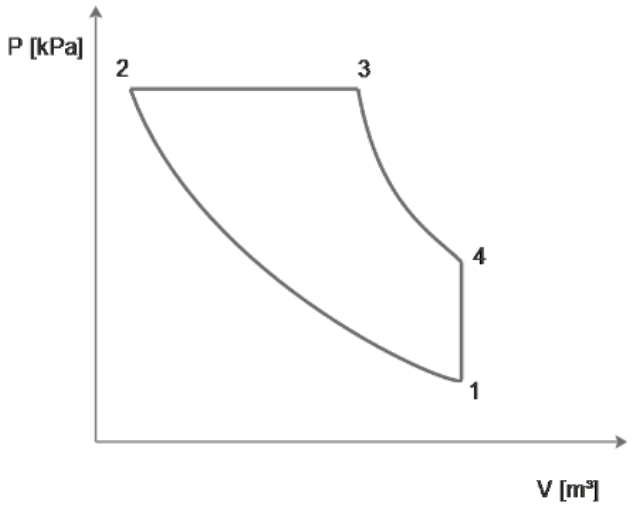

$$IP = \frac{P(LA)CE}{60}$$

$$= \frac{P(LA)NE}{60 \times 2}$$

$$= \frac{P\left(\frac{1{,}228\ \pi\ D^3}{4}\right)NE}{60 \times 2}$$

$$= \frac{1{,}228\ \pi\ D^3 PNE}{480} \checkmark$$

$$D^3 = \frac{IP \times 480}{1{,}228\ \pi \times P \times N \times E}$$

$$D = \sqrt[3]{\frac{IP \times 480}{1{,}228\ \pi \times P \times N \times E}}$$

$$= \sqrt[3]{\frac{60 \times 480}{1{,}228 \times \pi \times 720 \times 1\ 500 \times 4}} \times 10^3 \checkmark$$

$$= 120\ \text{mm} \checkmark$$ (4)

1.2 $V_s = V_1 - V_2$

$V_s = 14V_2 - V_2$

$\frac{\pi}{4} \times D^2 \times L = 13V_2$ ✓

$\frac{\pi}{4} \times 0{,}12^2 \times (1{,}228 \times 0{,}12) = 13V_2$

$V_2 = \frac{\pi \times 0{,}12^2 \times 1{,}228 \times 0{,}12}{4 \times 13} \times 10^6$

$= 128{,}2 \text{ cm}^3$ ✓

$V_1 = V_4 = 14V_2$

$V_1 = V_4 = 14 \times 128{,}2$

$V_1 = V_4 = 1\,794{,}8 \text{ cm}^3$ ✓

$V_3 = V_2 + 0{,}1V_s$

$= 128{,}2 + 0{,}1\left[\frac{\pi}{4} \times 0{,}12^2 \times (1{,}228 \times 0{,}12)\right] \times 10^6$ ✓

$= 294{,}86 \text{ cm}^3$ ✓ (5)

1.3 $$T_1 = T_2\left(\frac{V_2}{V_1}\right)^{n_c-1}$$

$$= 973\left(\frac{128,2}{1\,794,8}\right)^{0,4}\checkmark$$

$$= 338,58\ \text{K}\checkmark$$

$$\frac{V_2}{T_2} = \frac{V_3}{T_3}$$

$$T_3 = \frac{V_3 T_2}{V_2}$$

$$= \frac{294,86 \times 973}{128,2}\checkmark$$

$$= 2\,237,9\ \text{K}\checkmark$$

$$T_3 - T_4 = 982,354$$

$$T_4 = T_3 - 982,354$$

$$T_4 = 2\,237,9 - 982,354$$

$$= 1\,255,546\ \text{K}\checkmark$$ (5)

1.4 $$Q_{3-4} = W_{3-4} + \Delta U_{3-4}$$

$$Q_{3-4} = \frac{mR(T_3 - T_4)}{n_e - 1} + mC_v(T_4 - T_3)$$

$$n_e = 1 + \frac{mR(T_3 - T_4)}{Q_{3-4} - mC_v(T_4 - T_3)}\checkmark$$

$$= 1 + \frac{1 \times (0,288)(982,354)}{176,824 - [1 \times 0,72(-982,354)]}\checkmark$$

$$= 1,32\checkmark$$ (3)

1.5 $$Q_{rej.} = mC_v(T_1 - T_4)\checkmark$$

$$= 1 \times 0,72(338,58 - 1\,255,546)\checkmark$$

$$= -660,216\ \text{kJ/kg}\checkmark$$ (3)

[20]

Copyright reserved

QUESTION 2

2.1 2.1.1

$$\text{At 780 kPa: } h_g = 2\,\frac{767\text{ kJ}}{\text{kg}} \text{ and } t_s = 169{,}4\text{ °C}$$

$$\text{At 2 000 kPa and 300 °C: } h_{su} = 3\,025\text{ kJ/kg}$$

$$C_c = \sqrt{2\,000\,(h_1 - h_c)}$$

$$h_c = h_1 - \frac{C_c^2}{2\,000}$$

$$= 3\,025_{(2\,000\text{ kPa}/300\text{ °C})} - \frac{495^2}{2\,000}\checkmark$$

$$= 2\,902{,}488\text{ kJ/kg}\checkmark$$ (2)

2.1.2

$$h_c = h_g + C_p(t_{su} - t_s)$$

$$T_c = t_{su} = \frac{h_c - h_g}{C_p} + t_s$$

$$= \frac{2\,902{,}488 - 2\,767_{(780\text{ kPa})}}{2{,}6}\checkmark + 169{,}4_{(780\text{ kPa})}\checkmark$$

$$= 221{,}511\text{ °C}\checkmark$$ (3)

2.1.3

$$V_c = \frac{n-1}{n}\left[\frac{h_c - 1\,941}{P_c}\right]$$

$$= \frac{0{,}3}{1{,}3}\left[\frac{2\,902{,}488 - 1\,941}{780}\right]\checkmark$$

$$= 0{,}285\text{ m}^3\text{/kg}\checkmark$$ (2)

2.1.4

$$A_c = \frac{m.V_c}{C_c}$$

$$= \frac{\left(\frac{275}{60}\right) \times 0{,}285}{495} \times 10^6\checkmark$$

$$= 2\,638{,}889\text{ mm}^2\checkmark$$ (2)

2.1.5

$$D_c = \sqrt{\frac{4 \times A_c}{\pi}}$$

$$= \sqrt{\frac{4 \times 2\,638{,}889}{\pi}}\checkmark$$

$$= 57{,}965\text{ mm}\checkmark$$ (2)

2.2 2.2.1 $x_{act} \times \% = x_i$

$$x_{act} = \frac{x_i}{\%}$$

$$= \frac{0,94}{0,9894}$$

$$= 0,95 \checkmark \quad (1)$$

2.2.2 $V_2 = x_{act} \times v_g$

$$= 0,95 \times 0,72 \checkmark$$

$$= 0,684 \ m^3/kg \checkmark \quad (2)$$

2.2.3 $A_2 = \frac{\pi}{4} \times D_2^2$

$$= \frac{\pi}{4} \times 69^2 \checkmark$$

$$= 3\,739,281 \ mm^2 \checkmark \quad (2)$$

2.2.4 $C_2 = \frac{\dot{m} \times V_2}{A_2}$

$$= \frac{\left(\frac{275}{60}\right) \times 0,684}{\left(\frac{3\,739,281}{10^6}\right)} \checkmark$$

$$= 838,396 \ m/s \checkmark \quad (2)$$

2.2.5 $C_2 = \sqrt{2\,000\,(h_1 - h_2)}$

$$h_2 = h_1 - \frac{C_2^2}{2\,000}$$

$$= 3\,025_{(2\,000\ kPa/300\ °C)} - \frac{838,396^2}{2\,000} \checkmark$$

$$= 2\,673,546 \ kJ/kg \checkmark \quad (2)$$

[20]

QUESTION 3

3.1

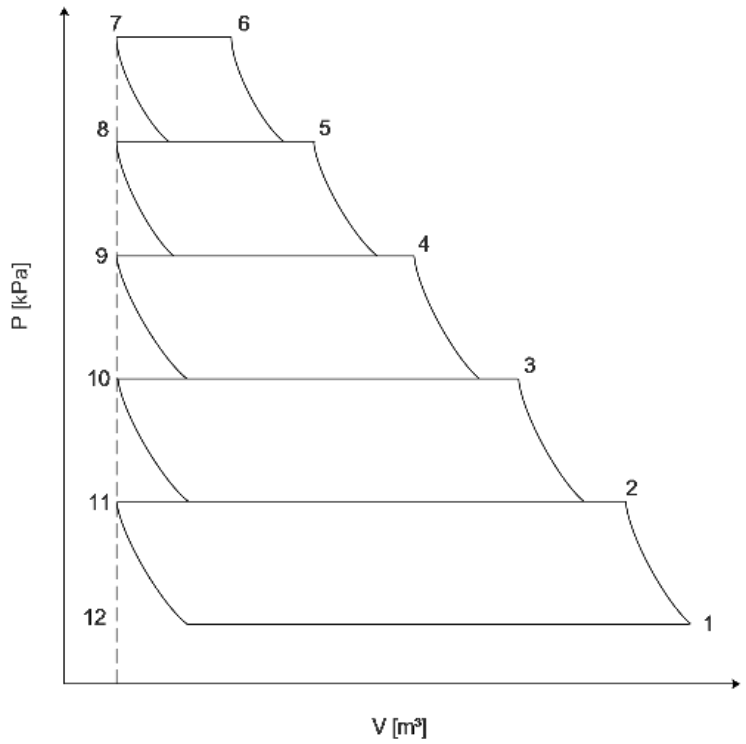

$$P_{compr.} = \frac{xn}{n-1} P_1 \dot{V}_{e1} \left[\left(\frac{p_{x+1}}{P_1} \right)^{\frac{n-1}{xn}} - 1 \right] \checkmark$$

$$= \frac{5 \times 1,3}{0,3} \times 96 \times \left(\frac{14,4}{60} \right) \left[\left(\frac{31\,000}{96} \right)^{\frac{0,3}{5 \times 1,3}} - 1 \right] \checkmark$$

$$= 152,547 \text{ kW} \checkmark$$

$$P_{motor} = \frac{P_{compr.}}{\eta_{mech.}}$$

$$= \frac{152,547}{0,89}$$

$$= 171,401 \text{ kW} \checkmark$$

Alternative method:

Under the conditions, the power required per compressor is the same.

Consider stage 1 compressor:

Stage pressure ratio:

$$k^x = \frac{P_{final}}{P_{initial}}$$

$$k = \sqrt[5]{\frac{31 \times 10^3}{96}}$$

$= 3{,}1755$ … same for all stages√

$$P_{comp} = \frac{nP_1S\dot{V}_{e1}}{n-1}\left[(k)^{\frac{n-1}{n}} - 1\right]$$

$$= \frac{1{,}3 \times 96 \times 14{,}4}{(1{,}3-1)60}\left[(3{,}1755)^{\frac{1{,}3-1}{1{,}3}} - 1\right] \checkmark$$

$= 30{,}509$ kW … per stage√

$$P_{comp-total} = 5 \times 30{,}509\surd$$

$= 152{,}5445$ kW√

$$P_{motor} = \frac{152{,}545}{0{,}89}\surd$$

$= 171{,}398$ kW√ (4)

3.2 $$\text{ratio}_{(\text{temp.})} = \frac{T_2'}{T_1} = \left(\frac{P_{x+1}}{P_1}\right)^{\frac{n-1}{xn}}$$

$$= \left(\frac{31\,000}{96}\right)^{\frac{0,3}{5\times1,3}} \checkmark$$

$$= 1,306 \checkmark$$

$$T_2' = T_3' = T_4' = T_5' = T_6' = T_1 \times \text{ratio}_{(\text{temp,})}$$

$$= 298 \times 1,306 \checkmark$$

$$= 389,188\ \text{K} \checkmark$$

Alternative method:

$$\frac{T_2}{T_1} = (k)^{\frac{n-1}{n}} = TR \ldots \text{temperature ratio is the same for all stages}$$

$$TR = (k)^{\frac{n-1}{n}} = (3,7155)^{\frac{1,3-1}{1,3}} = 1,30558 \checkmark$$

$$T_2 = 298 \times 1,30558 \checkmark$$

$$= 389,062\ \text{K} \checkmark$$

Also, $T_2 = T_3 = T_4 = T_5 = T_6 = 389,062\ \text{K} \checkmark$ (4)

3.3 $$P_1\dot{V}_{e1} = \dot{m}RT_1$$

$$\dot{m} = \frac{P_1\dot{V}_{e1}}{RT_1}$$

$$= \frac{96 \times 14,4}{0,287 \times 298} \checkmark$$

$$= 16,164\ \text{kg/min} \checkmark$$ (2)

3.4 $$Q_{\text{intercoolers (total)}} = [x-1]\left[\dot{m}C_p\Delta t\right] \checkmark$$

$$= 4\left[\frac{16,164}{60} \times 1,005(389,188 - 298)\right] \checkmark$$

$$= 98,756\ \text{kJ/s} \checkmark$$ (3)

3.5 $$Q_{\text{leaving}} = Q_{\text{intercooler}} = \frac{Q_{\text{intercoolers (total)}}}{[x-1]}$$

$$= \frac{98,756}{4}$$

$$= 24,689\ \text{kJ/s} \checkmark$$ (1)

Copyright reserved

3.6 $P_{compressor} = Q_{water\ jackets} + x[Q_{/intercooler}]$

$Q_{water\ jackets} = P_{compressor} - x[Q_{/intercooler}]$✓

$= 152{,}547 - 5 \times 24{,}689$✓

$= 29{,}102\ kJ/s$✓

Alternative method:

Under the conditions, the heat transferred to each cooling water jacket is the same.

Consider cylinder number 1:

$Q_{WJ} = \dot{m}A(T_1 - T_2)\left[\frac{R}{n-1} - C_v\right]$

$= \frac{14{,}4}{60}(298 - 389{,}189)\left[\frac{0{,}287}{0{,}3} - (1{,}005 - 0{,}287)\right]$✓

$= -5{,}863\ kJ/s$

$\therefore\ Q_{WJ} = 5{,}863\ kJ/s$ (radiated) … per cylinder√

$Q_{WJ-total} = 5 \times 5{,}583$✓

$\therefore Q_{WJ-total} = 29{,}316\ kJ/s$ (radiated)√ (3)

3.7 $\eta_{iso} = \frac{W_{iso.}}{W_{poly.}} = \frac{P_1 \dot{V}_{e1} \ln\left(\frac{p_{x+1}}{P_1}\right)}{P_{motor}} \times 100$✓

$= \frac{96 \times \left(\frac{14{,}4}{60}\right) \times \ln\left(\frac{31\,000}{96}\right)}{171{,}401} \times 100$✓

$= 77{,}663\%$✓ (3)

[20]

QUESTION 4

4.1 At $P = 150\ kPa$ and $t = 200\ °C$: $h_{su} = 2\,873\ kJ/kg$

$Q_{moisture} = m_{moisture}[h_{su} - C_{p(water)}\Delta t_{water}]$✓

$= 0{,}58[2\,873_{(150\ kPa/200\ °C)}$✓ $- 4{,}2 \times (20)$✓$]$

$= 1\,617{,}62\ kJ/kg$ fuel✓ (4)

4.2 At $P = 150$ kPa and $t_s = 150$ °C: $h_{su} = 2\,773$ kJ/kg

$Q_{moisture} = m_{moisture}\left[h_{su} - C_{p(water)}\Delta t_{water}\right]$✓

$= 0{,}58\left[2\,773_{(150\text{ kPa}/150\text{ °C})}\text{✓} - 4{,}2 \times (20)\text{✓}\right]$

$= 1\,559{,}62$ kJ/kg fuel✓ (4)

4.3 $Q_{dry\ flue} = (m_{air} + m_{fuel} - m_{moisture})C_{pg}\Delta t_g$

$m_{air} = \dfrac{Q_{dry\ flue}}{C_{pg}\Delta t_g} + m_{moisture} - m_{fuel}$✓

$= \dfrac{3\,762}{1{,}045(200 - 20)} + 0{,}58 - 0{,}98$✓

$= 19{,}6$ kg/kg fuel✓ (3)

4.4 $Q_{dry\ flue} = (m_{air} + m_{fuel} - m_{moisture})C_{pg}\Delta t_g$✓

$= (19{,}1 + 0{,}98 - 0{,}58) \times 1{,}045 \times (150 - 20)$✓

$= 2\,649{,}075$ kJ/kg fuel✓ (3)

4.5 At $t_{fw1} = 95{,}2$ °C: $h_{fw1} = 399$ kJ/kg

$\eta_{th1} = \dfrac{m_{s1}(h_{su1} - h_{fw1})}{m_f \times CV}$

$h_{su1} = \dfrac{\eta_{th1} \times m_f \times CV}{m_{s1}} + h_{fw1}$✓

$= \dfrac{0{,}780\,04 \times 1 \times 30\,460}{9} + 399_{(95{,}2\text{ °C})}$✓

$= 3\,039$ kJ/kg✓ (3)

4.6 $\eta_{th2} = \dfrac{m_{s2}(h_{su2} - h_{fw1})}{m_f \times CV} \times 100$

$= \dfrac{9{,}2\left[(3\,039 + 9)\text{✓} - 399_{(95{,}2\text{ °C})}\right]}{1 \times 30\,460} \times 100$✓

$= 80\%$✓ (3)

[20]

QUESTION 5

5.1 $\dot{Q}_{cond.} = \dot{m}_r(h_2 - h_3)$

$$h_3 = h_2 - \frac{\dot{Q}_{cond.}}{\dot{m}_r}$$

$$= 482{,}1 - \frac{2\,679{,}75}{(0{,}125 \times 60)}$$ ✓

$$= 124{,}8 \text{ kJ/kg}$$ ✓

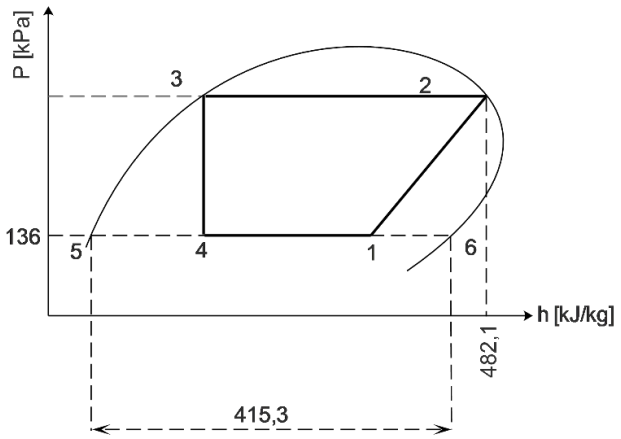

(2)

5.2 $h_4 = h_5 + x_4(h_6 - h_5)$

$$= h_5 + x_4 h_{fg}$$

$$h_5 = h_4 - x_4 h_{fg}$$

$$= 124{,}8 - 0{,}191\,9(415{,}3)$$ ✓

$$= 45{,}4 \text{ kJ/kg}$$ ✓ (2)

5.3 $h_6 - h_5 = h_{fg}$

$$h_6 = h_5 + h_{fg}$$

$$= 45{,}4 + 415{,}3$$ ✓

$$= 460{,}7 \text{ kJ/kg}$$ ✓ (2)

5.4 $h_1 = h_5 + x_1 h_{fg}$

$$= 45{,}4 + 0{,}96(415{,}3)$$ ✓

$$= 444{,}088 \text{ kJ/kg}$$ ✓ (2)

5.5 $RE = \dot{m}_r(h_1 - h_4)$ ✓

$$= (0{,}125 \times 60)(444{,}088 - 124{,}8)$$ ✓

$$= 2\,394{,}66 \text{ kJ/min}$$ ✓ (3)

5.6 $\dot{V}_e = \dot{m}_r \times v_1$ ✓

$$= (0{,}125 \times 60) \times 0{,}2233$$ ✓

$$= 1{,}675 \text{ m}^3/\text{min}$$ ✓ (3)

5.7 $\dot{V}_e = V_s \times \eta_{vol} \times N$

$= \frac{\pi}{4} \times D^2 \times L \times \eta_{vol} \times N$

$= \frac{\pi}{4} \times D^2 \times 1{,}2D \times \eta_{vol} \times N$

$D = \sqrt[3]{\frac{4\,\dot{V}_e}{1{,}2\pi \times \eta_{vol} \times N}}$ ✓

$= \sqrt[3]{\frac{4 \times 1{,}675}{1{,}2\pi \times 0{,}947\,9 \times 120}} \times 10^3$ ✓

$= 250$ mm✓ (3)

5.8 $L = 1{,}2D$

$= 1{,}2 \times 250$

$= 300$ mm✓ (1)

5.9 $Q_{cond.} = m_w c_w \Delta t_w$

$\Delta t_w = \frac{Q_{cond.}}{m_w c_w}$

$= \frac{2\,679{,}75}{32 \times 4{,}187}$ ✓

$= 20$ °C✓ (2)

[20]

TOTAL: 100

Copyright reserved