higher education & training

Department:
Higher Education and Training
REPUBLIC OF SOUTH AFRICA

MARKING GUIDELINE

NATIONAL CERTIFICATE

POWER MACHINES N6

12 APRIL 2018

This marking guideline consists of 16 pages.

Copyright reserved

✓ = 1 MARK

✓½ = ½ MARK

QUESTION 1

1.1 $At\ 2600kPa;\ h_g = 2802kJ/kg\ and\ t_s = 226°C$ ✓½

$h_1 = h_g + C_{p1}(t_{su} - t_s)$ ✓½

$= 2802 + 2,76(276 - 226)$ ✓

$= 2940kJ/kg$ ✓ (3)

1.2 1.2.1

$At\ 1400kPa;\ h_g = 2788kJ/kg\ and\ t_s = 195°C$ ✓½ ✓½

$C_c = \sqrt{2\times10^3(h_1 - h_c)}$

$h_c = h_1 - \frac{C_c^{\,2}}{2\times10^3}$ ✓½

$= 2940 - \frac{500^2}{2\times10^3}$ ✓½

$= 2815kJ/kg$ ✓ (3)

1.2.2 $h_c = h_g + C_{pc}(t_{su} - t_s)$ ✓½

$C_{pc} = \frac{h_c - h_g}{t_{su} - t_s}$ ✓½

$= \frac{2815 - 2788}{205 - 195}$ ✓½

$= 2,7kJ/kg.K$ ✓½ (2)

1.2.3 $V_c = \frac{n-1}{n}\left[\frac{h_c - 1941}{P_c}\right]$ ✓½

$= \frac{0,3}{1,3}\left[\frac{2815 - 1941}{1400}\right]$ ✓½

$= 0,144m^3/kg$ ✓ (2)

1.3 1.3.1

$At\ 600kPa;\ h_f = 670kJ/kg\ and\ h_{fg} = 2085kJ/kg\ and\ V_g = 0,3155m^3/kg$ ✓½

$h_2' = h_f + x'.h_{fg}$ ✓½

$= 670 + 0,945(2085)$ ✓

$= 2640,325kJ/kg$ ✓ (3)

1.3.2 $$x = \frac{x'}{\%}$$
$$= \frac{0,945}{0,99265} \checkmark½$$
$$= 0,952 \checkmark½$$ (1)

1.3.3 $$h_2 = h_f + x.h_{fg} \checkmark½$$
$$= 670 + 0,952(2085) \checkmark½$$
$$= 2654,92kJ / kg \checkmark$$ (2)

1.3.4 $$V_2 = x.V_g$$
$$= 0,952 \times 0,3155 \checkmark½$$
$$= 0,300\ 4m^3 / kg \checkmark½$$ (1)

1.4 $$\eta_{div.} = \frac{h_c - h_2}{h_c - h_2'} \checkmark$$
$$= \frac{(2815 - 2654,92) \checkmark½}{(2815 - 2640,325) \checkmark½} \times 100\%$$
$$= 91,644\% \checkmark$$ (3)
[20]

QUESTION 2

2.1

$$U = \frac{\pi DN}{60}$$

$$= \frac{\pi \times 0{,}976 \times 3131}{60} \checkmark\frac{1}{2}$$

$$= 160 m/s \ [32mm] \checkmark\frac{1}{2}$$

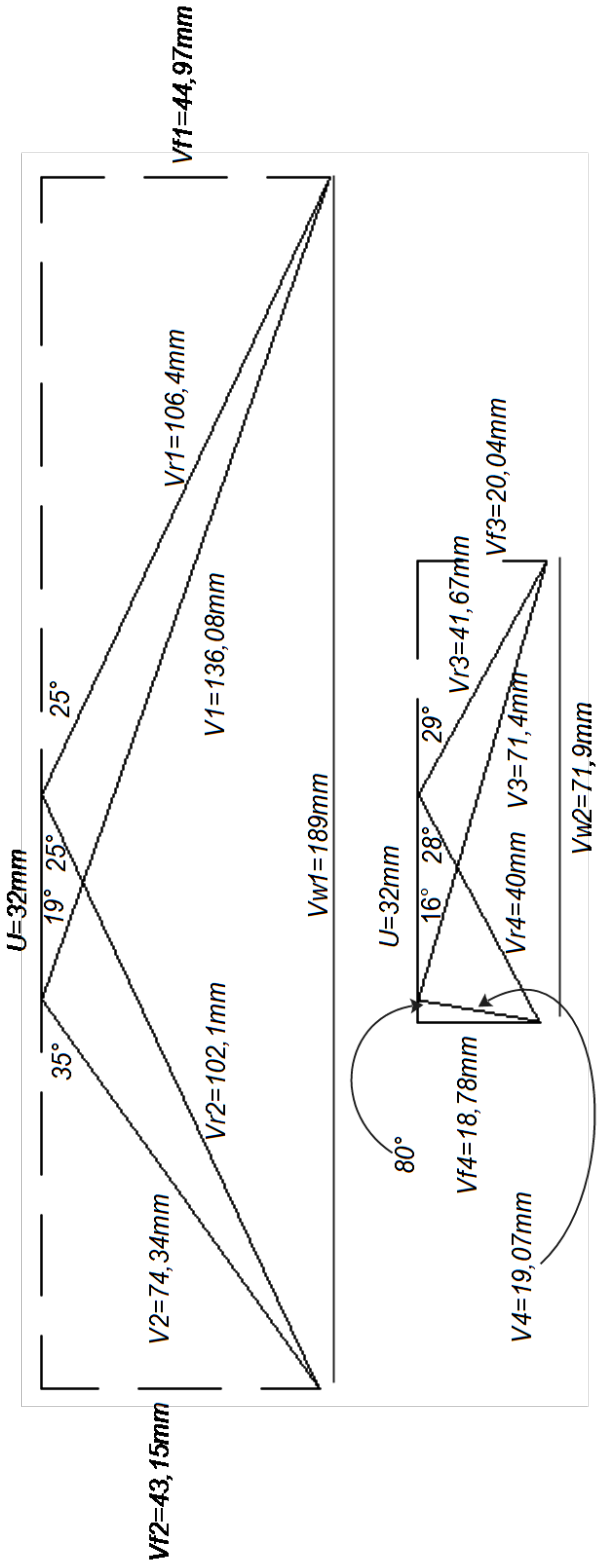

Award ½ mark for each line and angle as indicated on the diagram, up to a maximum of 18 values only.

Allow a tolerance of ± 1° for angles and a tolerance of ±2 mm for lengths. (10)

2.2 2.2.1 $V_{r1} = 106,4 \times 5$
$= 532m/s$ ✓

2.2.2 $V_4 = 19,07 \times 5$
$= 95,35m/s$ ✓

2.2.3 $V_3 = 71,4 \times 5$
$= 357m/s$ ✓

2.2.4 $V_2 = 74,34 \times 5$
$= 371,7m/s$ ✓

2.2.5 $V_1 = 136,08 \times 5$
$= 680,4m/s$ ✓

2.2.6 $\theta_1 = 25°$ ✓

2.2.7 $\theta_2 = 29°$ ✓

2.2.8 $\alpha_2 = 16°$ ✓

2.2.9 $\beta_1 = 35°$ ✓

2.2.10 $\alpha_1 = 19°$ ✓

(10 × 1) (10)
[20]

QUESTION 3

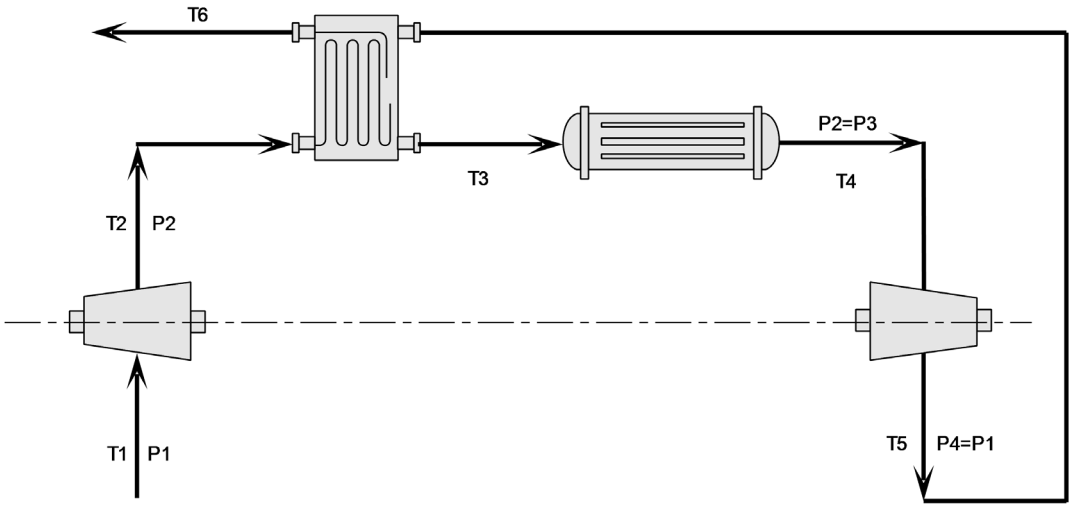

3.1
$$T_2' = T_1\left(\frac{P_2}{P_1}\right)^{\left(\frac{\gamma-1}{\gamma}\right)} \checkmark½$$
$$= 288(5)^{\left(\frac{0,4}{1,4}\right)} \checkmark½$$
$$= 456,14K \checkmark$$
(2)

3.2
$$\eta_c = \frac{T_2'-T_1}{T_2-T_1}$$
$$T_2 = T_1 + \frac{T_2'-T_1}{\eta_c} \checkmark½$$
$$= 288 + \frac{456,14-288}{0,8} \checkmark½$$
$$= 498,175K \checkmark$$
(2)

3.3
$$Q_{cc} = mC_p(T_4 - T_3)$$
$$T_4 = T_3 + \frac{Q_{cc}}{mC_p} \checkmark½$$
$$= 670 + \frac{1018,575}{2,5\times1,006} \checkmark½$$
$$= 1075K \checkmark½$$
(2)

3.4
$$T_5' = T_4\left(\frac{P_4}{P_3}\right)^{\left(\frac{\gamma-1}{\gamma}\right)} \checkmark½$$
$$= 1075\left(\frac{1}{5}\right)^{\left(\frac{0,4}{1,4}\right)} \checkmark½$$
$$= 678,739K \checkmark$$
(2)

3.5
$$\eta_t = \frac{T_4-T_5}{T_4-T_5'}$$
$$T_5 = T_4 - \eta_t(T_4 - T_5') \checkmark$$
$$= 1075 - 0,82(1075-678,739) \checkmark½$$
$$= 750,066K \checkmark$$
(3)

3.6
$$P = mC_p(T_4 - T_5 - T_2 + T_1) \checkmark$$
$$= 2,5\times1,006(1075-750,066-498,175+288) \checkmark$$
$$= 288,619kW \checkmark$$
(3)

3.7 $$\eta_{th.} = \frac{T_4 - T_5 - T_2 + T_1}{T_4 - T_3} \times 100\% \ \checkmark$$

$$= \frac{1075 - 750,066 - 498,175 + 288}{1075 - 670} \times 100\% \ \checkmark$$

$$= 28,336\% \ \checkmark$$

OR

$$\eta_{th.} = \frac{P}{Q_{cc}} \times 100\%$$
$$= \frac{288,619}{1018,575} \times 100\%$$
$$= 28,336\%$$ (3)

3.8 $$\eta_{H.E.} = \frac{T_3 - T_2}{T_5 - T_6} \times 100\% \ \checkmark$$
$$= \frac{670 - 498,175}{750,066 - 504,6} \times 100\% \ \checkmark$$
$$= 70\% \ \checkmark$$ (3)
[20]

QUESTION 4

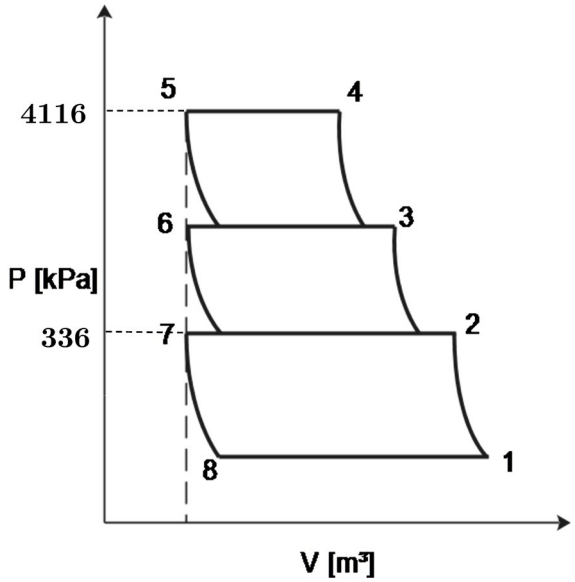

4.1

$$r_{ps} = \sqrt{\frac{P_4}{P_2}} \quad \checkmark½$$
$$= \frac{4116}{336}$$
$$= 3,5 \quad \checkmark½$$

(1)

4.2

$$P_3 = \frac{P_4}{r_{ps}} \quad \checkmark½$$
$$= \frac{4116}{3,5}$$
$$= 1176kPa \quad \checkmark½$$

OR

$$P_3 = P_2 \times r_{ps}$$
$$= 336 \times 3,5$$
$$= 1176kPa$$

OR

$$P_3 = \sqrt{P_4 \times P_2}$$
$$= \sqrt{4116 \times 336}$$
$$= 1176kPa$$

(1)

4.3

$$P_1 = \frac{P_2}{r_{ps}} \quad \checkmark½$$
$$= \frac{336}{3,5} \quad \checkmark½$$
$$= 96kPa \quad \checkmark$$

(2)

4.4

$$T_2' = T_1\left(\frac{P_2}{P_1}\right)^{\left(\frac{n-1}{n}\right)} \quad \checkmark½$$
$$= 300\left(3,5\right)^{\left(\frac{0,331}{1,331}\right)} \quad \checkmark½$$
$$= 409,659K \quad \checkmark$$

(2)

4.5

$$P = \frac{xn}{n-1} mRT_1 \left[\left(\frac{P_2}{P_1} \right)^{\left(\frac{n-1}{n} \right)} - 1 \right] \quad \checkmark$$

$\checkmark$½ $\checkmark$½

$$= \frac{3 \times 1,331}{0,331} \times \frac{900}{60 \times 60} \times 0,288 \times 300 \left[(3,5)^{\left(\frac{0,331}{1,331} \right)} - 1 \right]$$

$$= 95,247 kJ / s$$

$$= 95,247 kW \ \checkmark$$

(3)

4.6 4.6.1

$$P_2 V_{e2} = mRT_2$$

$$V_{e2} = \frac{mRT_2}{P_2} \quad \checkmark½$$

$\checkmark$½

$$= \frac{\left(\frac{900}{60} \right) \times 0,288 \times 300}{336} \quad \checkmark½$$

$$= 3,857 m^3 / \min \ \checkmark½$$

$$= \frac{3,857 m^3}{\min} \times \frac{1 \min}{290 r} \checkmark½$$

$$= 0,013\,3 m^3 / rev$$

$$= 0,0133 m^3 / cycle \ \checkmark½$$

(3)

4.6.2

$$V_2 = 26 V_{c2} \ \checkmark½$$

$$V_2 = V_{s2} + V_{c2}$$

$$\therefore V_{s2} = 26 V_{c2} - V_{c2} = 25 V_{c2} \quad \checkmark½$$

$$V_{c2} = 0,04 V_{s2}$$

$$and \ \frac{V_{c2}}{V_{s2}} = 0,04 \ \checkmark½$$

$$\eta_{vol.2} = 1 - \frac{V_{c2}}{V_{s2}} \left[\left(\frac{P_3}{P_2} \right)^{\left(\frac{1}{n} \right)} - 1 \right] \ \checkmark½$$

$$= 1 - 0,04 \left[(3,5)^{\left(\frac{1}{1,331} \right)} - 1 \right] \ \checkmark½$$

$$= 93,478\% \quad \checkmark½$$

(3)

4.6.3

$$\eta_{vol.2} = \frac{V_{e2}}{V_{s2}}$$

$$V_{s2} = \frac{V_{e2}}{\eta_{vol.2}} \checkmark½$$

$$= \frac{0,0133}{0,93478} \checkmark½$$

$$= 0,014\ 2 m^3 / cycle \checkmark$$

(2)

4.6.4

$$V_{c2} = 0,04 V_{s2} \checkmark½$$

$$= 0,04 \times 0,0142$$

$$= 0,000\ 568 m^3 / cycle \checkmark½$$

(1)

4.6.5

$$V_2 = 26 V_{c2} \checkmark½$$

$$= 26 \times 0,000\ 568 \checkmark½$$

$$= 0,014\ 768 m^3 / cycle \checkmark$$

OR

$$V_2 = V_{s2} + V_{c2}$$

$$= 0,014\ 2 + 0,000\ 568$$

$$= 0,014\ 768 m^3 / cycle$$

(2)
[20]

QUESTION 5

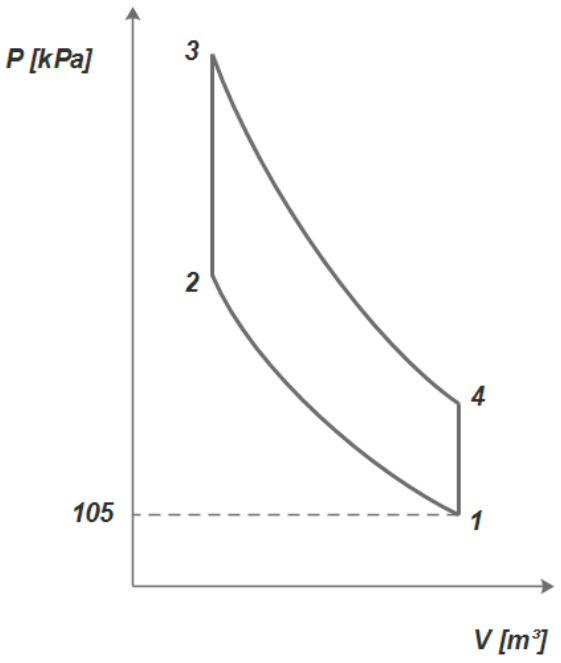

5.1

$$T_2 = T_1\left(\frac{V_1}{V_2}\right)^{(\gamma-1)} \checkmark½$$
$$= 350(7{,}179)^{0{,}4} \checkmark½$$
$$= 770K \checkmark½$$

$$P_2 = P_1\left(\frac{V_1}{V_2}\right)^{\gamma} \checkmark½$$
$$= 105(7{,}179)^{1{,}4} \checkmark½$$
$$= 1658{,}36kPa \checkmark½$$

$$WD = Q_{rej.} - Q_{rec.} = \frac{mR}{\gamma-1}\left[T_3 - T_2 - T_4 + T_1\right] \checkmark½ \ \ldots \ \frac{R}{\gamma-1} = C_v \checkmark½$$
$$WD = mC_v\left[T_3 - T_4 - T_2 + T_1\right] \checkmark½$$
$$551{,}424 = 1 \times 0{,}718\left[T_3 - T_4 - 770 + 350\right] \checkmark½$$
$$768 = T_3 - T_4 - 420$$
$$T_3 - T_4 = 1188K \checkmark½$$

$$\frac{P_3}{P_4} = \frac{V_4T_3}{V_3T_4} \checkmark½$$
$$= \frac{7{,}179V_3T_3}{V_3T_4} \checkmark½$$
$$= \frac{7{,}179T_3}{T_4} \checkmark½$$
$$\textit{also } \frac{P_3}{P_4} = \left(\frac{V_4}{V_3}\right)^{\gamma} \checkmark½$$
$$\therefore \frac{7{,}179T_3}{T_4} = \left(\frac{V_4}{V_3}\right)^{\gamma} = (7{,}179)^{1{,}4} \checkmark½$$
$$T_3 = \frac{(7{,}179)^{1{,}4}}{7{,}179} \times T_4 \checkmark½$$
$$T_3 = 2{,}2T_4 \checkmark½$$

from above

$T_3 - T_4 = 2,2T_4 - T_4 = 1,2T_4 = 1188$ ✓½
$and\ T_4 = 990K$ ✓½

$T_3 = 2,2T_4$ ✓½
$= 2,2 \times 990$ ✓½
$= 2178K$ ✓½

$$P_3 = \frac{P_2 T_3}{T_2}$$
$$= \frac{1658,36 \times 2178}{770}$$ ✓½
$= 4690,79kPa$ ✓½

$$P_4 = \frac{P_1 T_4}{T_1}$$ ✓½
$$= \frac{105 \times 990}{350}$$ ✓½
$= 297kPa$ ✓½

OR

$$P_4 = P_3\left(\frac{V_3}{V_4}\right)^{\gamma}$$
$$= 4690,79\left(\frac{1}{7,179}\right)^{1,4}$$
$= 297kPa$ (14)

5.2 $Q_{rec.} = mC_v\left(T_3 - T_2\right)$ ✓½
$= 1 \times 0,718\left(2178 - 770\right)$ ✓½
$= 1010,944kJ/kg$ ✓ (2)

5.3 $Q_{rej.} = mC_v\left(T_1 - T_4\right)$ ✓½
$= 1 \times 0,718\left(350 - 990\right)$ ✓½
$= -459,52kJ/kg$ ✓ (2)

5.4 $$ASE = \frac{Q_{rec.} - Q_{rej.}}{Q_{rec.}} \quad \checkmark\frac{1}{2}$$

$$= \frac{(1010,944 - 459,52)}{1010,944} \checkmark\frac{1}{2} \times 100\%$$

$$= 54,545\% \quad \checkmark\frac{1}{2}$$

OR

$$ASE = \left[1 - \left(\frac{1}{r}\right)^{(\gamma-1)}\right] \times 100\%$$

$$= \left[1 - \left(\frac{1}{7,179}\right)^{0,4}\right] \times 100\%$$

$$= 54,546\%$$

(2)
[20]

QUESTION 6

6.1 6.1.1 $\checkmark\frac{1}{2}$ $\checkmark\frac{1}{2}$ $\checkmark\frac{1}{2}$

$$At\ 2550kPa;\ h_f = 967kJ/kg,\ h_{fg} = 1834kJ/kg,\ h_g = 2801kJ/kg,$$
$$t_s = 225°C \checkmark\frac{1}{2}$$

$$h_{su} = h_g + C_p\left(t_{su} - t_s\right) \checkmark$$
$$= 2801 + 2,75(301 - 225) \checkmark$$
$$= 3010kJ/kg\ steam \checkmark$$

(5)

6.1.2 $$\eta_{th.} = \frac{m_s\left(h_{su} - h_{fw1}\right)}{m_f \times CV}$$

$$h_{fw1} = h_{su} - \frac{\eta_{th.} \times m_f \times CV}{m_s} \quad \checkmark\frac{1}{2}$$

$$= 3010 - \frac{0,8256 \times 950 \times 30\ 000}{8170} \checkmark\frac{1}{2}$$

$$= 130kJ/kg\ steam \checkmark$$

(2)

6.1.3

$$\eta_{econ.} = \frac{m_s\left(h_{fw2} - h_{fw1}\right)}{m_f \times CV}$$

$$h_{fw2} = h_{fw1} + \frac{\eta_{econ.} \times m_f \times CV}{m_s} \quad \checkmark½$$

$$= 130 + \frac{0,08256 \times 30\ 000}{8,6} \quad \checkmark½$$

$$= 418 kJ / kg\ steam \quad \checkmark$$

(2)

6.1.4

$$Q_{\text{sup.}} = \frac{m_s}{m_f}\left[\left(1-x\right)\right] \times h_{fg} + C_p\left(t_{su} - t_s\right)$$

$$\left(1-x\right)h_{fg} = \frac{Q_{\text{sup.}} \times m_f}{m_s} - C_p\left(t_{su} - t_s\right) \checkmark$$

$$\left(1-x\right) \times 1834 \ \checkmark½ = \frac{2586,02 \times 1}{8,6} - 2,75\left(301 - 225\right) \ \checkmark½$$

$$x = 0,95 \ \checkmark$$

(3)

6.1.5

$$Q_{evap.} = \frac{m_s}{m_f}\left[h_f + x.h_{fg} - h_{fw2}\right] \ \checkmark$$

$$= \frac{8,6}{1}\left[967 + 0,95\left(1834\right) - 418\right] \ \checkmark$$

$$= 19\ 705,18 kJ / kg\ \ fuel \ \checkmark$$

(3)

6.2

$Q_{in}\ [kJ/kg]$	$Q_{out}\ [kJ/kg]$	*Quantity*	%
30 000	$Q_{econ.}$	8,6 (418 - 130) = 2476,8 ✓½	8,256 ✓½
	$Q_{evap.}$	19 705,18 ✓½	65,684 ✓½
	$Q_{\text{sup.}}$	2 586,02	8,62 ✓
	$Q_{wet\ \ flues}$	1 575	5,25 ✓½
	$Q_{dry\ \ flues}$	1 905	6,35 ✓½
	$Q_{unaccounted}$	30 000 – 28 248 = 1 752 ✓½	5,84 ✓½
TOTALS		30 000	100

(5)

[20]

QUESTION 7

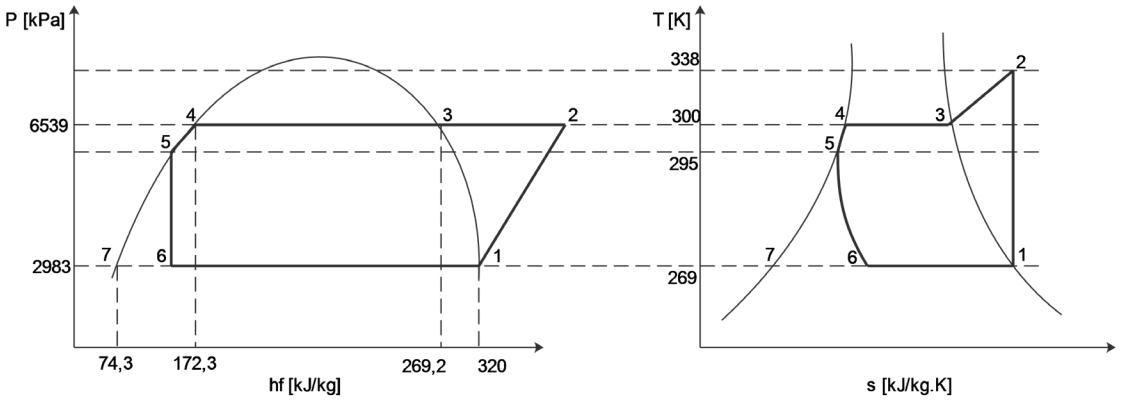

7.1
$$h_2 = h_3 + C_p\left(T_2 - T_3\right) \quad \checkmark$$
$$= 269,2 + 2,18\left(338 - 300\right) \checkmark$$
$$= 352,04kJ\ /\ kg \checkmark$$
(3)

7.2
$$P_c = m_r \times WD$$
$$= m_r\left(h_2 - h_1\right) \checkmark\frac{1}{2}$$
$$= 0,5\left(352,04 - 320\right) \checkmark\frac{1}{2}$$
$$= 16,02kW \quad \checkmark$$
(2)

7.3
$$m_r = \frac{0,5kg}{s} \times \frac{60s}{1\min} \times \frac{1\min}{240r} \quad \checkmark\frac{1}{2}$$
$$= 0,125kg\ /\ r$$
$$= 0,125kg\ /\ cycle \quad \checkmark\frac{1}{2}$$
(1)

7.4
$$V_r = V_e$$
$$= m_r \times V_g$$
$$= 0,125\frac{kg}{cycle} \times 0,012\frac{m^3}{kg} \checkmark\frac{1}{2}$$
$$= 0,001\,5m^3\ /\ cycle \checkmark\frac{1}{2}$$
(1)

7.5
$$\eta_{vol.} = \frac{V_e}{V_s} = \frac{V_r}{V_s}$$
$$\therefore V_s = \frac{V_r}{\eta_{vol.}} \checkmark$$
$$= \frac{0,001\,5}{0,921} \checkmark$$
$$= 0,001\,629m^3 \checkmark$$
(3)

7.6

$$V_s = \frac{\pi D^2 L}{4}$$

$$= \frac{\pi}{4} \times D^2 \times 1,2D \quad \checkmark½$$

$$= \frac{1,2\pi D^3}{4} \quad \checkmark½$$

$$D = \sqrt[3]{\frac{4V_s}{1,2\pi}}$$

$$= \sqrt[3]{\frac{4 \times 0,001\,629}{1,2\pi}} \quad \checkmark½$$

$$= 0,12m$$

$$= 120mm \quad \checkmark½$$

$$L = 1,2D$$

$$= 1,2 \times 120 \quad \checkmark½$$

$$= 144mm \quad \checkmark½$$

(3)

7.7

$$h_5 = h_4 - C_p\left(T_4 - T_5\right) \quad \checkmark$$

$$= 172,3 - 4,12\left(300 - 295\right) \checkmark$$

$$= 151,7kJ/kg \quad \checkmark$$

(3)

7.8

$$RE = m_r\left(h_1 - h_5\right) \quad \checkmark½$$

$$= 0,5\left(320 - 151,7\right) \quad \checkmark½$$

$$= 84,15kJ/s \quad \checkmark$$

(2)

7.9

$$COP = \frac{RE}{WD} \quad \checkmark½$$

$$= \frac{84,15}{16,02} \quad \checkmark½$$

$$= 5,259 \quad \checkmark$$

OR

$$COP = \frac{h_1 - h_5}{h_2 - h_1}$$

$$= \frac{320 - 151,7}{352,04 - 320}$$

$$= 5,253$$

(2)
[20]

TOTAL: 100

Copyright reserved