higher education & training

Department:
Higher Education and Training
REPUBLIC OF SOUTH AFRICA

MARKING GUIDELINE

NATIONAL CERTIFICATE

APRIL EXAMINATION

POWER MACHINES N6

31 March 2016

This marking guideline consists of 11 pages.

Copyright reserved

QUESTION 1

1.1 $P2 = \sqrt{P1..P3}$

$= \sqrt{104x.800}$

$= 288,44$ kPa (3)

1.2 $V_1 = Ve_1/N = 0,4 \times 60/550 = 0,04364\ m^3$

$m = \frac{P_1V_1}{RT_1} = \frac{104 \times 0,04364}{0,287 \times 292} = 0,05416$ kg

$V_{2'} = \frac{mRT_{2'}}{P_2} = \frac{0,05416 \times 0,287 \times 292}{288,44} = 0,01574\ m^3$ (6)

1.3 $L_2 = D_2$

$Vs_{2'} = V_{2'} = \frac{\pi(D_2)^2}{4}.D_2$

$0,01574 = \frac{\pi (D2)^3}{4}.$

$\therefore L_2 = D_2 = 271,63$ mm (4)

1.4

$$P = \frac{2n}{n-1}P_1V_1\left[\left(\frac{P_2}{P_1}\right)^{\frac{n-1}{n}} - 1\right]$$

$$= \frac{2x1,3}{0,3} \times 104 \times 0,4\left[\left(\frac{288,44}{104}\right)^{\frac{0,3}{1,3}} - 1\right]$$

$$= 95,69\,kW$$ (4)

$$\Pr eq = \frac{P_{act}}{\eta}$$

$$= \frac{95,69}{0,88}$$

$$= 108,74..kW$$

(7)
[20]

QUESTION 2

2.1 At 44,8 °C : h_1 = 188 kJ/kg
At 93,5 °C : h_2 = 392 kJ/kg
At 1 500 kPa & 350 °C :h4 = 3 148 kJ/kg

$$\therefore \eta_{plant} = \frac{m_s(h_4 - h_1)}{m_f \times H_v} \times \frac{100}{1}$$
$$= \frac{5400(3148 - 188)}{600 \times 32\,000} \times \frac{100}{1}$$
$$= 83{,}25\% \quad (3)$$

2.2
$$EE = \frac{m_s(h_4 - h_1)}{m_f \times 2257}$$
$$= \frac{5\,400(3148 - 188)}{600 \times 2\,257}$$
$$= 11{,}803\ kg..steam/kg..fuel \quad (2)$$

2.3
$$Q_{ECON} = \frac{m_s(h_2 - h_1)}{m_f}$$
$$= \frac{5\,400(392 - 188)}{600}$$
$$= 1\,836.kJ/kg \quad (2)$$

2.4 At 1 500 kPa: h_f = 845 kJ/kg and h_{fg} = 1 945 kJ/kg

$$h_3 = hf + xhfg$$
$$= 845 + (0{,}9 \times 1945)$$
$$= 2\,595{,}5\ kJ/kg$$
$$Q_{EVAP} = \frac{m_s(h_3 - h_2)}{m_f}$$
$$= \frac{5\,400(2\,595{,}5 - 392)}{600}$$
$$= 19\,831{,}5.kJ/kg \quad (3)$$

2.5
$$Q_{SUPER} = \frac{m_s(h_4 - h_3)}{m_f}$$
$$= \frac{5\,400(3\,148 - 2\,595{,}5)}{600}$$
$$= 4\,972{,}5.kJ/kg \quad (3)$$

Copyright reserved

2.6 $Q_{FLGAS} = mCp\Delta T$

$= (15+1)\,x1{,}045\left(210-24\right)$

$= 3\,109{,}92\,kJ/kg$ (2)

2.7

Q_{in} (kJ /kg)	Q_{out} (kJ /kg)	%
Q_{FUEL} = 32 000	Q_{ECON} = 1 836	5,74
	Q_{EVAP}= 19 831,5	61,97
	Q_{SUPER} = 4 972,5	15,54
	Q_{FLUGAS} = 3 109,92	9,72
	Unaccounted = 2 250,08	7,03
32 000	32 000	100

(5)
[20]

QUESTION 3

3.1

ɣ = Cp/Cv = 1/0,712 = 1,4

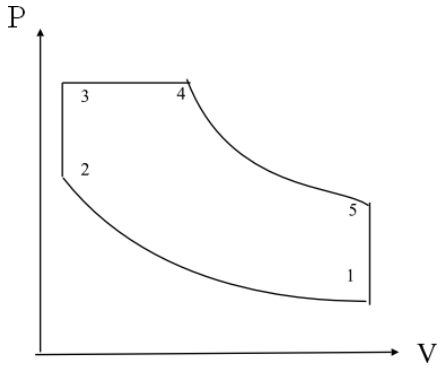

$T_2 = T_1\left(\frac{V_1}{V_2}\right)^{\gamma-1}$

$= 289\left(\frac{13}{1}\right)^{1,4-1}$

$= 806{,}26\,K$

$T_2 = P_1\left(\frac{V_1}{V_2}\right)^{\gamma}$

$= 10{,}325\left(\frac{13}{1}\right)^{1,4}$

$= 3\,674{,}83.kPa$ (5)

3.2 $T_3 = \frac{T_2.P_3}{P_2}$

$= \frac{806{,}26x5\,000}{3674{,}83}$

$= 1\,097..K$ (2)

3.3

$$Q_{2-3} = \frac{2}{3}Q_T$$

$$Q_{3-4} = \frac{1}{3}Q_T$$

$$\left(\frac{2}{3}\right)m.Cv.(T_3 - T_2) = \left(\frac{1}{3}\right)mCp.(T_4 - T_3)$$

$$2x0{,}712\,(1097 - 806{,}26) = 1\left(T_4 - 1097\right)$$

$$T_4 = 1\,511{,}01.K$$ (5)

3.4

$$V_4 = \frac{T_4.V_3}{T_3}$$

$$= \frac{1\,511{,}01x1}{1\,097}$$

$$= 1{,}3774.m^3$$ (2)

3.5

$$T_5 = T_4\left(\frac{V_4}{V_5}\right)^{\gamma-1}$$

$$= 1511{,}01\left(\frac{1{,}3774}{13}\right)^{0{,}4}$$

$$= 615{,}62\,K$$ (2)

3.6

$$ASE = 1 - \frac{T_5 - .T_1}{(T_3 - T_2).+.\gamma(T_4 - T_3)}..x..100\%$$

$$= 1 - \frac{615{,}62 \quad -.289}{(1\,097 - 806{,}26).+.1{,}4\,(1\,511{,}01 - 1\,097)}..x..100\%. = .62{,}47\%$$ (4)

[20]

QUESTION 4

4.1

$$Tc' = T_1\left(\frac{2}{\gamma+1}\right)$$

$$= 753\left(\frac{2}{1{,}4+1}\right)$$

$$= 627{,}5\,K$$

$$\eta_{CONV} = \frac{(T_1 - T_C)}{(T_1 - Tc')} \times \frac{100}{1}$$

$$90 = \frac{(753 - Tc)}{(753 - 627{,}5)} \times \frac{100}{1}$$

$$\therefore Tc = 640{,}05.K$$

$$Pc = P_1\left(\frac{2}{\gamma+1}\right)^{\frac{\gamma}{\gamma-1}}$$

$$= 3\,000\left(\frac{2}{2{,}4}\right)^{\frac{1{,}4}{0{,}4}}$$

$$= 1\,584{,}85\,kPa$$

$$V_C = \frac{R\ .Tc}{P_C}$$

$$= \frac{0{,}287x640{,}05}{1584{,}85}$$

$$= 0.11591.m^3$$

$$Cc = \sqrt{2\,000.Cp.(T_1 - Tc) + C_1{}^2}$$

$$= \sqrt{2\,000x1{,}005(753 - 640{,}05) + 60^2}\ . = .480{,}2\ m/s$$

$$A_C = \frac{m.Vc}{C_C}$$

$$= \frac{1{,}2x0{,}11591}{480{,}24}$$

$$= 289{,}63\,mm^2$$

(10)

4.2

$$T2' = T_1\left(\frac{P_2}{P_1}\right)^{\frac{\gamma-1}{\gamma}}$$

$$= 753\left(\frac{600}{3000}\right)^{\frac{0,4}{1,4}}$$

$$= 475,43K$$

$$\eta_{DIVER} = \frac{(T_C - T_2)}{(T_C - T2')} \times \frac{100}{1}$$

$$85 = \frac{(640,05 - T_2)}{(640,05 - 475,43)} \times \frac{100}{1}$$

$$\therefore T_2 = 500,12.K$$

$$C_2 = \sqrt{2\,000.Cp.(T_1 - T_2) + C_1^{\,2}}$$

$$= \sqrt{2\,000x1,005(753 - 500,12) + 60^2}. = 715,46.m/s$$

$$V_2 = \frac{RT_2}{P_2}$$

$$= \frac{0,287x500,12}{600}$$

$$= 0,23922.m^3$$

$$A_2 = \frac{mV_2}{C_2}$$

$$= \frac{1,2x0,23922}{715,4}$$

$$= 401,26.mm^2$$ (8)

4.3

$$Mach..No = \frac{C_2}{C_C}$$

$$= \frac{715,46}{480,24}$$

$$= 1,489$$ (2)

[20]

QUESTION 5

5.1
$$B.P = \frac{P_B.LACE}{60}$$
$$= \frac{738x1,5\left(\frac{\pi}{4}\right)x(0,76)^2\,x112x5}{60}$$
$$= 4\,687,07kW \quad (4)$$

5.2
$$\eta_{mech} = \frac{BP}{IP}.x.100\%$$
$$IP = \frac{4\,687,07}{86,5}x.100\%$$
$$= 5\,418,58.kW \quad (2)$$

5.3
$$\eta_{BRAKE.THERMAL} = \frac{BP}{mf/s.x.CV}.x.100\%$$
$$= \frac{4687,07}{\frac{1\,050}{3\,600}x44\,200}x.100\%$$
$$= 36,36\% \quad (3)$$

5.4
$$BP = \frac{2\pi NT}{60}.$$
$$4687,07 = \frac{2\pi NT}{60}$$
$$\therefore T = 399,63\,kNm \quad (3)$$

5.5
$$V_1 = \frac{mRT_1}{P_1}.$$
$$= \frac{22x\frac{1\,050}{60}x0,287(16+273)}{101,325}$$
$$\therefore V_1 = 315,155.m^3/\min \quad (3)$$

5.6
$$V_S = \frac{\pi}{4}D^2xLxNxE$$
$$= \frac{\pi}{4}(0,76)^2\,x1,5x112x5$$
$$= 381,063.m^3/\min \quad (3)$$

5.7
$$\eta_{VOL} = \frac{V_1}{V_S}.x.100\%$$
$$= \frac{315,155}{381,063}x.100\%$$
$$= 82,70\%$$
(2)
[20]

QUESTION 6

6.1

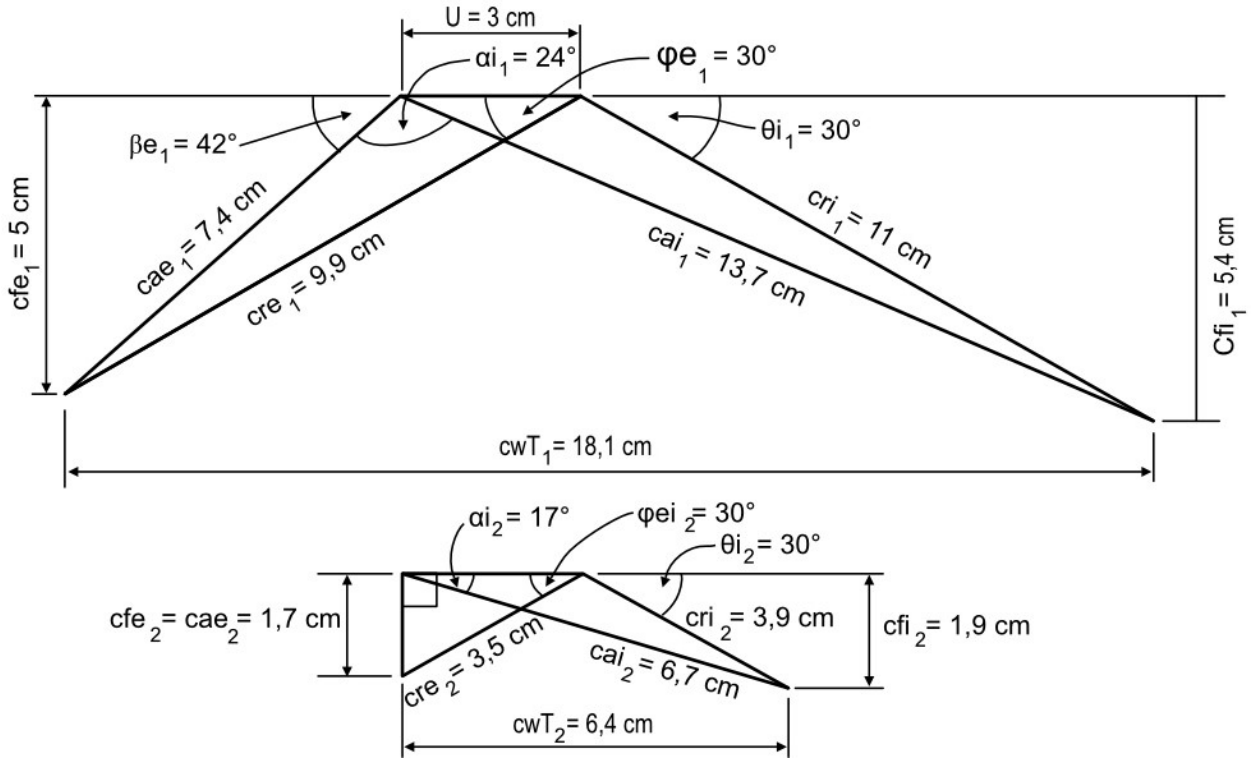

(10)

6.2 6.2.1 U = 3 x 36,5 = 110 m/s (2)

6.2.2 P = m.u.CwT = 1 x 110 (660,65 + 233,6) =98,37 kW (3)

6.2.3
$$\eta = \frac{2UCw_T}{(Cai_1)^2}.x.100\%$$
$$= \frac{2x110(660,65+233,6).}{500^2}x.100\%$$
$$= 78,69\%$$
(3)

6.2.4 $F_{axial} = m[(Cfi_1 – Cfe_1) + (Cfi_2 – Cfe_2)$

$= 1[(5,41 - 5) +(1,9 – 1,7)$

$= 22,27$ N (2)

[20]

QUESTION 7

7.1 Ideal C.O.P $= \frac{T1}{T2-T1}$

$= \frac{267}{304-267}$

$= \frac{267}{37}$

$= 7,216$

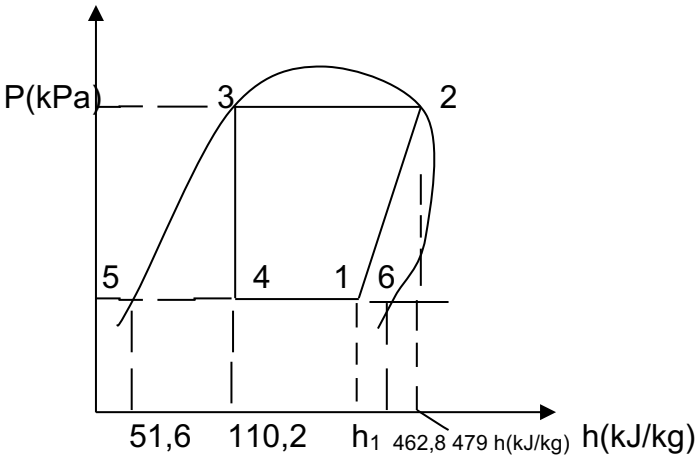

Actual C.O.P = ηx C.O.P

$= 0, 9023 \times 7,216$

$= 6,511$ (3)

7.2 C.O.P $= \frac{h1-h4}{h2-h1}$

C.O.P $= (h_2 – h_1) = h_1 – h_4$

$6,511 = (479-h_1) = h_1 -110, 2$

$3118,769 + 110, 2 = h_1 + 6,511h_1$

$h_1 = \frac{3228,969}{7,511}$

$= 429,9$ kJ/kg

$h_1 = h_5 + x_1(h_4 – h_5)$

$x_1 = \frac{h1-h5}{h6-h5} = \frac{429,9-51,6}{462,8-51,6} = \frac{378,8}{411,2} = 0,92$ (5)

7.3 $V_s = \frac{\pi D^2 L}{4} = \frac{\pi}{4} D^2 \times 1,2\ D$

$= \frac{1,2 \times \pi D^3}{4} = \frac{1,2 \times \pi \times (0,1285)^3}{4}$

$= 0,002\ m^3/s$

$V_s = \frac{0,062 \times 420}{60} = 0,014\ m^3/s$

$Ve = V_s \times \eta_{vol} = 0,014 \times 0,9 = 0,0126\ m^3/s$ (5)

7.4 $V_1 = x_1 . Vg_1 = 0,92 \times 0,168 = 0,155\ m^3/kg$

$m_r = \frac{Ve}{v1} = \frac{0,0126}{0,155} \times 60 = 4,88\ kg/min$ (4)

7.5 $P_c = mr\ (h_2 - h_1) = \frac{4,88}{60} (479 - 429,9) = \frac{4,88}{60} (49,1)$

$= 4\ kJ/s$

$P_m = Pc / \eta_{mec} = \frac{4}{0,8} = 5\ kW$ (3)

[20]

TOTAL: 100

Copyright reserved