higher education & training

Department:
Higher Education and Training
REPUBLIC OF SOUTH AFRICA

NASIENRIGLYN

NASIONALE SERTIFIKAAT

KRAGMASJIENE N6

7 AUGUSTUS 2018

Hierdie nasienriglyn bestaan uit 16 bladsye.

Kopiereg voorbehou

✓ = 1 PUNT

✓½ = ½ PUNT

VRAAG 1

By nasieners word aangedring dat hulle konsekwente akkuraatheid aan die dag moet lê wanneer hulle nasien, d.i. die oordra van kandidate se verkeerde antwoorde in opeenvolgende stappe.

1.1

$$T_2' = T_1\left(\frac{P_2}{P_1}\right)^{\frac{n-1}{n}} \checkmark½$$
$$= 298(4)^{\frac{0,32}{1,32}} \checkmark½$$
$$= 417,033\ K \checkmark$$

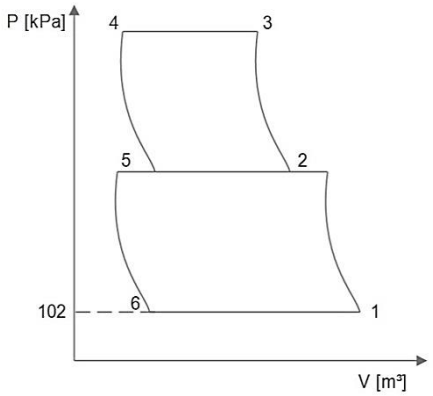

(2)

1.2

$$T_2 = T_3'\left(\frac{P_3}{P_2}\right)^{\frac{n-1}{n}} \checkmark½$$
$$= 473\left(\frac{1}{4,5}\right)^{\frac{0,32}{1,32}} \checkmark½$$
$$= 328,478\ K \checkmark$$

(2)

1.3

$$Q_{\text{int.}} = \dot{m}(T_2' - T_1) \checkmark½$$
$$= \frac{18}{60}(417,033 - 328,478)$$
$$= 26,567\ kJ/s \checkmark½$$

(1)

1.4 1.4.1

$$P_1\dot{V}_{e1} = mRT_1$$
$$\dot{V}_{e1} = \frac{\dot{m}RT_1}{P_1} \checkmark½$$
$$= \frac{18 \times 0,2876 \times 298}{60 \times 102} \checkmark½$$
$$= 0,252\ m^3/s \checkmark½$$

$$\dot{V}_e = \frac{0,252m^3}{s} \times \frac{60s}{1\text{min}} \times \frac{1\text{min}}{500\ revs.} \checkmark½$$
$$= 0,03m^3/revolution \checkmark½$$
$$= 0,03m^3/cycle \checkmark½$$

(3)

1.4.2

$$\eta_{vol1.} = \frac{V_{e1}}{V_{s1}}$$

$$V_{s1} = \frac{V_e}{\eta_{vol1.}} \quad \checkmark\frac{1}{2}$$

$$= \frac{0,03}{0,95} \quad \checkmark\frac{1}{2}$$

$$= 0,031\,579\ m^3 / cycle \quad \checkmark$$

(2)

1.4.3

$$V_s = \frac{\pi D^2 L}{4}$$

$$V_s = \frac{\pi D^2 \times 1,25D}{4} \quad \checkmark\frac{1}{2}$$

$$D = \sqrt[3]{\frac{4V_s}{1,25\pi}}$$

$$= \sqrt[3]{\frac{4 \times 0,031\,579}{1,25\pi}} \checkmark\frac{1}{2}$$

$$= 0,318\ m$$

$$= 318,029\ mm \quad \checkmark\frac{1}{2}$$

and

$$L = 1,25D \quad \checkmark\frac{1}{2}$$

$$= 1,25 \times 318,029 \checkmark\frac{1}{2}$$

$$= 397,536\ mm \ \checkmark\frac{1}{2}$$

(3)

1.4.4

$$\eta_{vol1.} = 1 - \frac{V_c}{V_s}\left[\left(\frac{P_2}{P_1}\right)^{\frac{1}{n}} - 1\right]$$

$$V_c = \frac{(1 - \eta_{vol1.})V_s}{\left(\frac{P_2}{P_1}\right)^{\frac{1}{n}} - 1} \quad \checkmark$$

$$= \frac{(1 - 0,95) \times 0,031\,579}{4^{\left(\frac{1}{1,32}\right)} - 1} \checkmark$$

$$= 0,000\,849\,7\ m^3 / cycle \checkmark$$

(3)

1.5 ✓½ ✓½

$$P = \frac{n}{n-1} mRT_1 \left[\left(\frac{P_2}{P_1} \right)^{\frac{n-1}{n}} - 1 \right] + \frac{n}{n-1} mRT_2 \left[\left(\frac{P_3}{P_2} \right)^{\frac{n-1}{n}} - 1 \right]$$

✓ ✓

$$= \frac{1,32}{0,32} \times \frac{18}{60} \times 0,2876 \times 298 \left[(4)^{\frac{0,32}{1,32}} - 1 \right] + \frac{1,32}{0,32} \times \frac{18}{60} \times 0,2876 \times 328,478 \left[(4,5)^{\frac{0,32}{1,32}} - 1 \right]$$

$$= 42,364 + 51,436$$

$$= 93,8\ kW \quad ✓$$

(4)
[20]

VRAAG 2

2.1

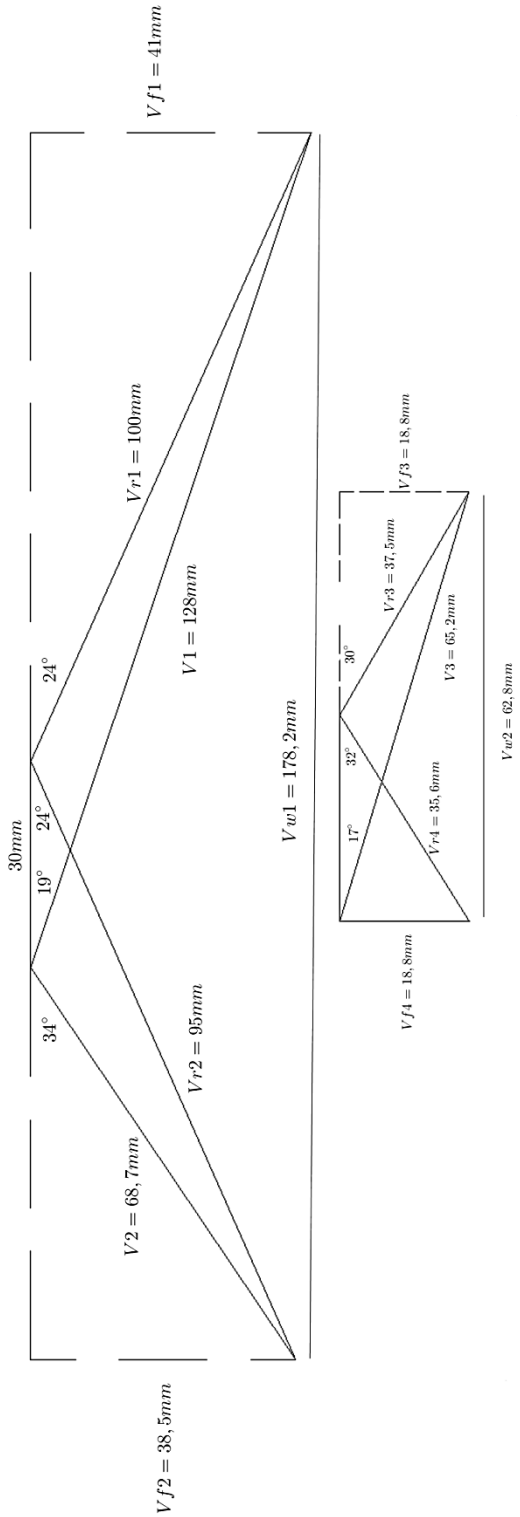

$$U = \frac{\pi DN}{60}$$
$$= \frac{\pi \times 0,955 \times 3000}{60} \quad \checkmark ½$$
$$= 150,011 \approx 150 m/s\ [30mm] \quad \checkmark ½$$

Ken ½ punt toe vir elke lengte of hoek soos op die diagram aangebied, tot ‘n maksimum van slegs 18 afmetings.

Laat ‘n toleransie van tot ±1° vir hoeke en ‘n toleransie van ±2 mm vir lengtes van lyne toe. (10)

2.2 2.2.1 $V_2 = 68,75 \times 5$
$= 343,5m/s$ ✓ (1)

2.2.2 $V_3 = 65,2 \times 5$
$= 326m/s$ ✓ (1)

2.2.3 $\theta_1 = \theta_2 = 24°$ ✓ (1)

2.2.4 $\beta_1 = 34°$ ✓ (1)

2.2.5 $F_{ax.} = \dot{m}\left[\left(V_{f1} - V_{f2}\right) + \left(V_{f3} - V_{f4}\right)\right]$
$= 50\left[\left(205 - 192,5\right) + \left(0\right)\right]$ ✓
$= 625N$
$= 0,625kN$ ✓ (2)

2.2.6 $P = \dot{m}UV_{wt}$
$= 50 \times 150\left(891 + 314\right)$ ✓
$= 9\ 037\ 500W$
$= 9,038MW$ ✓ (2)

2.2.7 $\eta = \dfrac{2UV_{wt}}{V_1^2} \times 100$
$= \dfrac{2 \times 150 \times 1205}{640^2} \times 100$ ✓
$= 88,257\%$ ✓

OR

$\eta = \dfrac{P}{\frac{1}{2}\dot{m}V_1^2} \times 100$
$= \dfrac{2 \times 9037,5 \times 10^3}{50 \times 640^2} \times 100$
$= 88,257\%$ (2)
[20]

VRAAG 3

3.1

$$BP = \frac{2\pi NT}{60}$$

$$= \frac{2\pi N(mgR)}{60} \quad \checkmark$$

$$= \frac{2 \times \pi \times 3000\left(41 \times 9{,}81 \times \frac{1{,}35}{2}\right)}{60} \quad \checkmark\frac{1}{2} \quad \checkmark\frac{1}{2}$$

$$= 85\ 291{,}649W$$

$$= 85{,}292kW \quad \checkmark$$

(3)

3.2

$$BP = \frac{P_b \times L \times A \times C \times E}{60}$$

$$P_b = \frac{60 \times BP}{L \times A \times C \times E} \quad \checkmark$$

$$= \frac{60 \times 85{,}292 \times 2}{3 \times 10^{-3} \times 3000} \quad \checkmark\frac{1}{2} \qquad LAE = 3l = 3 \times 10^{-3} m^3 \checkmark\frac{1}{2}$$

$$= 1\,137{,}227kPa \quad \checkmark$$

(3)

3.3

$$\eta_{mech.} = \frac{BP}{IP} \times 100$$

$$= \frac{85{,}292}{105} \times 100 \quad \checkmark$$

$$= 81{,}23\% \quad \checkmark$$

(2)

3.4

$$P_i = \frac{P_b}{\eta_{mech.}}$$

$$= \frac{1137{,}227}{0{,}8123} \quad \checkmark$$

$$= 1400{,}009kPa \quad \checkmark$$

OR

$$P_i = \frac{60 \times IP}{L \times A \times C \times E}$$

$$= \frac{60 \times 105 \times 2}{3 \times 10^{-3} \times 3000}$$

$$= 1400kPa$$

(2)

3.5
$$L \times A \times E = \frac{\pi \times D^2 \times l \times E}{4}$$
$$l = \frac{4L \times A \times E}{\pi D^2 E} \quad \checkmark$$
$$= \frac{4 \times 3 \times 10^{-3}}{\pi \times 0,095 \times 6} \quad \checkmark½$$
$$= 0,070539m \quad \checkmark½$$
$$= 70,54mm \quad \checkmark$$
(3)

3.6
$$\eta_{bt} = \frac{BP}{m_{f/s} \times CV}$$
$$m_{f/s} = \frac{BP}{\eta_{bt} \times CV} \quad \checkmark½$$
$$= \frac{85,292}{0,35 \times 45000} \quad \checkmark½$$
$$= 5,415\,37 \times 10^{-3} kg\ fuel/s \quad \checkmark½$$

$$\checkmark½ \quad \checkmark½$$
$$= \frac{5,415\,37 \times 10^{-3} kg\ fuel}{s} \times \frac{60s}{1\min} \times \frac{20\min}{1}$$
$$= 6,498kg\ fuel/20\min \quad \checkmark½$$
(3)

3.7
$$m_{f/h} = \frac{6,498kg\ fuel}{20\min} \times \frac{60\min}{1h} \quad \checkmark½$$
$$= 19,494kg\ fuel/h \quad \checkmark½$$

$$ISFC = \frac{m_{f/h}}{IP}$$
$$= \frac{19,494}{105} \quad \checkmark½$$
$$= 0,186kg/kW.h \quad \checkmark½$$
(2)

3.8
$$\dot{m}_{exh.} = \left(m_a + m_f\right) \times m_{f/\min}$$
$$= \left(22+1\right) \times \frac{6,498}{20} \quad \checkmark$$
$$= 7,473kg\ exhaust\ gas/\min \quad \checkmark$$
(2)
[20]

VRAAG 4

4.1

$$C_v = \frac{C_p}{\gamma} \text{ and } C_v = C_p - R$$

$$\therefore \frac{C_p}{\gamma} = C_p - R$$

$$C_p = \frac{\gamma R}{\gamma R - 1} \checkmark$$

$$= \frac{1,4 \times 0,287}{0,4} \checkmark$$

$$= 1,005 kJ/kg.K \checkmark$$ (3)

4.2 4.2.1

$$T_2' = T_1\left(\frac{P_2}{P_1}\right)^{\frac{\gamma-1}{\gamma}}$$

$$= 873\left(\frac{175}{800}\right)^{\frac{0,4}{1,4}} \checkmark$$

$$= 565,494K \checkmark$$ (2)

4.2.2

$$\eta = \frac{T_1 - T_2}{T_1 - T_2'}$$

$$T_2 = T_1 - \eta(T_1 - T_2') \checkmark½$$

$$= 873 - 0,89(873 - 565,494) \checkmark½$$

$$= 599,32K \checkmark$$ (2)

4.2.3

$$C_2 = \sqrt{2 \times 10^3 C_p (T_1 - T_2)} \checkmark½$$

$$= \sqrt{2 \times 10^3 \times 1,005(873 - 599,32)} \checkmark½$$

$$= 741,685 m/s \checkmark$$ (2)

4.3 4.3.1

$$C_c = \frac{C_2}{Mach\ No.} \checkmark½$$

$$= \frac{741,685}{1,3}$$

$$= 570,527 m/s \checkmark½$$ (1)

4.3.2 $$C_c = \sqrt{2\times10^3 C_p\left(T_1 - T_c\right)}$$

$$T_c = T_1 - \frac{C_c{}^2}{2\times10^3 C_p} \checkmark$$

$$= 873 - \frac{570,572^2}{2\times10^3\times1,005} \quad \checkmark½$$

$$= 711,059K \quad \checkmark½$$ (2)

4.3.3 $$T_c' = T_1\left(\frac{2}{\gamma+1}\right) \quad \checkmark½$$

$$= 873\left(\frac{2}{2,4}\right) \quad \checkmark½$$

$$= 727,5K \quad \checkmark$$ (2)

4.3.4 $$P_c = P_1\left(\frac{2}{\gamma+1}\right)^{\frac{\gamma}{\gamma-1}} \quad \checkmark½$$

$$= 800\left(\frac{2}{2,4}\right)^{\frac{1,4}{0,4}} \checkmark½$$

$$= 422,625kPa \quad \checkmark$$ (2)

4.4 $$V_2 = \frac{RT_2}{P_2} \quad \checkmark½$$

$$= \frac{0,287\times599,32}{175} \quad \checkmark½$$

$$= 0,983m^3 / kg\ air \quad \checkmark$$ (2)

4.5 $$\dot{m} = \frac{A_2C_2}{V_2} \quad \checkmark½$$

$$= \frac{745\times10^{-6}\times741,685}{0,983} \quad \checkmark½$$

$$= 0,562kg\ air / s \quad \checkmark$$ (2)

[20]

VRAAG 5

5.1 $At\ 2000kPa\ and\ 300°C\ ;\ h_{su} = 3025kJ/kg$ ✓½

$At\ 59°C;\ h_{fw1} = 247kJ/kg$ ✓½

$$\eta_{th.} = \frac{\dot{m}_s\left[h_{su} - h_{fw1}\right]}{\dot{m}_f \times CV} \times 100 \quad \checkmark½$$

$$= \frac{14400\left[3025 - 247\right]}{1650 \times 34000} \times 100 \quad \checkmark½$$

$$= 71{,}307\% \quad \checkmark½$$

(3)

5.2 $Q_g = m_g C_p \Delta T$

$$m_g = \frac{Q_g}{C_p \Delta t} \quad \checkmark½$$

$$m_g = \frac{3112}{1{,}05(200 - 25)} \quad \checkmark½$$

$$= 16{,}936kg\ flue\ gas/kg\ fuel \checkmark$$

$$m_g = m_a + m_f - m_m$$

$$m_m = m_a + m_f - m_g \quad \checkmark½$$

$$= 16{,}5 + 1 - 16{,}936 \quad \checkmark½$$

$$= 0{,}564kg\ moisture/kg\ fuel \quad \checkmark$$

(4)

5.3 $At\ 200\ °C\ and\ 300kPa;\ h_{su} = 2866kJ/kg$ ✓½

$$Q_m = m_m\left[h_{su} - h_w\right] \quad \checkmark½$$

$$= 0{,}564\left[2866 - 4{,}2 \times 25\right] \quad \checkmark$$

$$= 1557{,}204kJ/kg\ fuel \quad \checkmark$$

(3)

5.4

$$At\ 2000kPa;\ h_f = 908kJ/kg \quad \checkmark½ \quad and \quad h_{fg} = 1889kJ/kg \quad \checkmark½$$

$$Q_{\sup} = \frac{\dot{m}_s}{\dot{m}_f}\left[h_{su} - xh_{fg} - h_f\right] \quad \checkmark½$$

$$xh_{fg} = h_{su} - h_f - \frac{Q_{\sup} \times \dot{m}_f}{\dot{m}_s} \quad \checkmark½$$

$$x \times 1889 = 3025 - 908 - \frac{2326 \times 1650}{14400} \quad \checkmark½ \quad \checkmark½$$

$$x = 0,98 \quad \checkmark$$

(4)

5.5

$$At\ 88°C;\ h_{fw2} = 369kJ/kg \quad \checkmark½$$

$$Q_{evap.} = \frac{\dot{m}_s}{\dot{m}_f}\left[h_f + xh_{fg} - h_{fw2}\right] \quad \checkmark½$$

$$= \frac{14400}{1650}\left[908 + 0,98 \times 1889 - 369\right] \quad \checkmark$$

$$= 20860,102kj/kg\ fuel \quad \checkmark$$

(3)

5.6

$$Q_{econ.} = m_g C_{pg}\left(t_{in} - t_{out}\right)$$

$$t_{in} = \frac{Q_{econ.}}{m_g C_{pg}} + t_{out} \quad \checkmark$$

$$= \frac{1225}{\left(16,936 + 1\right) \times 1,05} + 200 \quad \checkmark$$

$$= 264,948°C \quad \checkmark$$

(3)
[20]

VRAAG 6

6.1

$$\frac{T_1}{T_2}=\left(\frac{V_2}{V_1}\right)^{n_c-1} \quad \checkmark½$$

$$\ln\left(\frac{T_1}{T_2}\right)=(n_c-1)\ln\left(\frac{V_2}{V_1}\right) \quad \checkmark½$$

$$n_c=1+\frac{\ln\left(\frac{T_1}{T_2}\right)}{\ln\left(\frac{V_2}{V_1}\right)} \quad \checkmark½$$

$$=1+\frac{\ln\left(\frac{1}{1,82}\right)}{\ln\left(\frac{1}{6,5}\right)} \quad \checkmark½$$

$$=1,32 \quad \checkmark$$

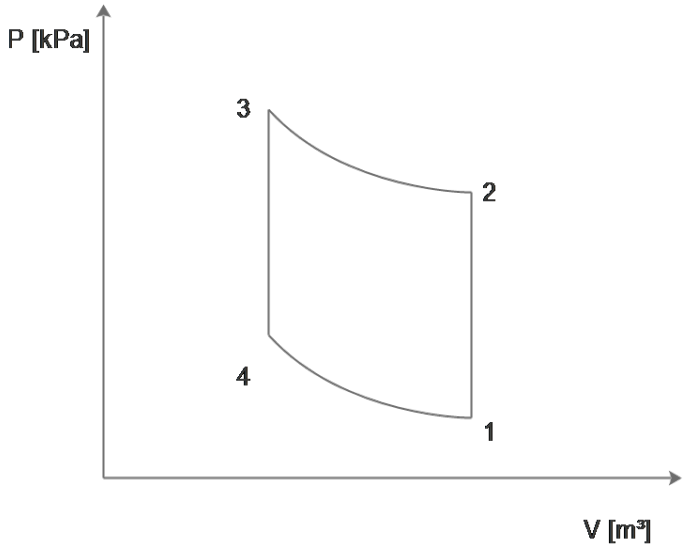

(3)

6.2

$$\frac{P_3}{P_4}=\left(\frac{V_4}{V_3}\right)^{n_e} \quad \checkmark½$$

$$n_e\times\ln\left(\frac{V_4}{V_3}\right)=\ln\left(\frac{P_3}{P_4}\right)$$

$$n_e=\frac{\ln\left(\frac{P_3}{P_4}\right)}{\ln\left(\frac{V_4}{v_3}\right)} \quad \checkmark½$$

$$=\frac{\ln(11,397)}{\ln(6,5)} \quad \checkmark½ \checkmark½$$

$$=1,3 \quad \checkmark$$

(3)

6.3

$$Q_{1-2}=WD+\Delta U \quad \checkmark½$$

$$=mR\left(\frac{T_1-T_2}{n_c-1}\right)+mC_v(T_2-T_1) \quad \checkmark½$$

$$m=\frac{Q_{1-2}}{R\left(\frac{T_1-T_2}{n_c-1}\right)+C_v(T_2-T_1)} \quad \checkmark½$$

$$=\frac{-0,088 \quad \checkmark½}{0,287\left(\frac{-246}{0,32}\right)+0,718(246)} \quad \checkmark½$$

$$=0,002kg/cycle \quad \checkmark½$$

(3)

6.4

$$WD = \frac{mR(T_3 - T_4)}{n_e - 1} + \frac{mR(T_1 - T_2)}{n_c - 1} \quad \checkmark\frac{1}{2}$$

$$= 0,002 \times 0,287\left(\frac{791,07}{0,3} - \frac{246}{0,32}\right) \quad \checkmark\frac{1}{2} \quad \checkmark\frac{1}{2}$$

$$= 1,072kJ / cycle \quad \checkmark\frac{1}{2}$$

(2)

6.5

$$T_2 = 1,82T_1 \ and \ T_2 - T_1 = 246$$

$$\therefore 1,82T_1 - T_1 = 246 \quad \checkmark\frac{1}{2}$$

$$T_1 = \frac{246}{0,82}$$

$$= 300K \quad \checkmark\frac{1}{2}$$

$$T_2 = 1,82T_1$$

$$= 1,82 \times 300$$

$$= 546K \quad \checkmark$$

$$T_3 = T_4\left(\frac{V_4}{V_3}\right)^{n_e - 1}$$

$$= T_4(6,5)^{0,3} \quad \checkmark$$

$$= 1,7534T_4 \quad \checkmark$$

OR

$$T_3 = \frac{P_3V_3T_4}{P_4V_4}$$

$$= \frac{11,397P_4 \times 1 \times T_4}{P_4 \times 6,5}$$

$$= 1,7534T_4$$

$$T_3 - T_4 = 1,7534T_4 - T_4$$

$$= 0,7534T_4 \quad \checkmark$$

$$0,753T_4 = 791,07$$

$$T_4 = 1050K \quad \checkmark$$

$$T_3 = 1,7534T_4$$

$$= 1,7534 \times 1050$$

$$= 1841,07K \quad \checkmark$$

(7)

6.6

$$\dot{m} = \frac{0,002kg}{cycle} \times \frac{625cycles}{\min} \times \frac{1\min}{60s} = 0,0208kg/s \quad \checkmark\frac{1}{2}$$

$$Q = \dot{m}C_v\left(T_1 - T_4\right) \quad \checkmark\frac{1}{2}$$
$$= 0,0208 \times 0,718\left(300 - 1050\right) \quad \checkmark\frac{1}{2}$$
$$= -11,219kJ/s \quad \checkmark\frac{1}{2}$$

(2)
[20]

VRAAG 7

7.1

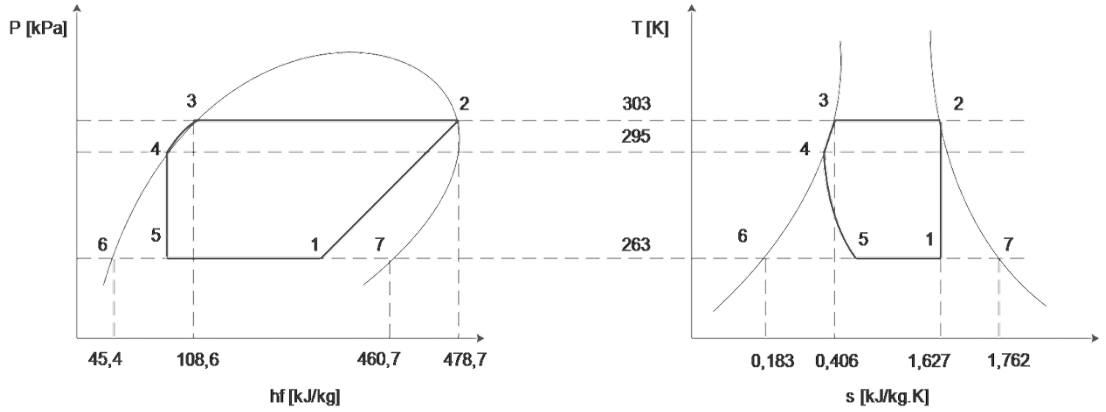

$$s_1 = s_6 + x_1\left(s_7 - s_6\right)$$
$$x_1 = \frac{s_1 - s_6}{s_7 - s_6} \quad \checkmark$$
$$= \frac{1,627 - 0,183}{1,762 - 0,183} \quad \checkmark$$
$$= 0,915 \quad \checkmark$$

(3)

7.2 $$h_1 = h_6 + x_1\left(h_7 - h_6\right) \quad \checkmark\frac{1}{2}$$
$$= 45,4 + 0,915\left(460,7 - 45,4\right) \quad \checkmark\frac{1}{2}$$
$$= 425,4kJ/kg \quad \checkmark$$

(2)

7.3 $$WD = h_2 - h_1 \quad \checkmark\frac{1}{2}$$
$$= 478,7 - 425,4 \quad \checkmark\frac{1}{2}$$
$$= 53,3kJ/kg \quad \checkmark$$

(2)

7.4 $$h_5 = h_3 - C_p\left(T_3 - T_4\right) \quad \checkmark$$
$$= 108,6 - 1,6\left(303 - 295\right) \quad \checkmark$$
$$= 95,8kJ/kg \quad \checkmark$$

(3)

7.5 $T_5(s_5 - s_6) = h_5 - h_6$

$$s_5 = \frac{h_5 - h_6}{T_5} = s_6 \quad \checkmark$$

$$= \frac{95,8 - 45,4}{263} + 0,183 \quad \checkmark$$

$$= 0,375 kJ.kg.K \quad \checkmark$$

OR

$$x_5 = \frac{h_5 - h_6}{h_7 - h_6}$$

$$= \frac{95,8 - 45,4}{460,7 - 45,4}$$

$$0,121$$

$$s_5 = s_6 + x_5(s_7 - s_6)$$

$$= 0,183 + 0,121(1,762 - 0,183)$$

$$0,374 kJ / kg.K$$ (3)

7.6 $\dot{m}_r(h_1 - h_5) = \dot{m}_i\left[h_{fi} + c_{pi}\Delta t_i + C_{pw}\Delta t_w\right]$

$$\dot{m}_r = \frac{\dot{m}_i\left[h_{fi} + C_{pi}\Delta t_i + C_{pw}\Delta t_w\right]}{h_1 - h_5} \quad \checkmark½$$

$\checkmark½$

$$= \frac{\frac{1200}{12}\left[342 + 1,91 \times 2 + 4,2 \times 15\right]}{425,4 - 95,8} \quad \checkmark½ \quad \checkmark½$$

$$= 124,035 kg \ refrigerant / h \quad \checkmark½$$

$$= \frac{124,035 kg \ refrigerant}{h} \times \frac{1h}{60 \min} \quad \checkmark½$$

$$= 2,067 kg / \min \quad \checkmark$$ (4)

7.7 $$P = \frac{WD \times m_r}{\eta} \quad \checkmark$$

$$= \frac{53,3 \times \frac{2,067}{60}}{0,9} \quad \checkmark$$

$$= 2,04 kW \quad \checkmark$$ (3)

[20]

TOTAAL: 100

Kopiereg voorbehou