higher education & training

Department:
Higher Education and Training
REPUBLIC OF SOUTH AFRICA

NATIONAL CERTIFICATE

PLUMBING THEORY N1

(11022041)

7 April 2020 (X-paper)
09:00–12:00

This question paper consists of 6 pages.

156Q1A2007

Copyright reserved

DEPARTMENT OF HIGHER EDUCATION AND TRAINING
REPUBLIC OF SOUTH AFRICA

NATIONAL CERTIFICATE
PLUMBING THEORY N1
TIME: 3 HOURS
MARKS: 100

INSTRUCTIONS AND INFORMATION

1. Answer all the questions.
2. Read all the questions carefully.
3. Number the answers according to the numbering system used in this question paper.
4. Use only a black or blue pen.
5. Assume that acceleration due to gravity is g = 9,81 m/s^2.
6. Write neatly and legibly.

Copyright reserved

QUESTION 1: SAFETY AND HOUSEKEEPING

1.1 Describe the aims of the Occupational Health and Safety Act. (3)

1.2 Briefly explain what is meant by the term *good housekeeping.* (2)
[5]

QUESTION 2: TOOLS AND MACHINES

2.1 Name of the tool used for each of the following:

2.1.1 Cutting small, round and oval holes and objects

2.1.2 Drawing accurate and permanent lines on metal

2.1.3 When joints or seams must be flattened

2.1.4 Drawing circles and circular arcs on metal

2.1.5 Making small dents in metal when holes must be drilled

2.1.6 Marking off and fitting gutter pipe elbows and similar work

(6 × 1) (6)

2.2 Name FOUR safety measures that should be followed when a grinding wheel is fitted (mounted) on a grinding machine. (4)
[10]

QUESTION 3: METALS AND MATERIALS

3.1 Copper is a very important metal used in the plumbing industry.

Describe the characteristics of copper with regard to:

3.1.1 Workability

3.1.2 Climatic restrictions

3.1.3 Where and for what it is used

(3 × 1) (3)

3.2 Give FIVE reasons for producing alloys. (5)
[8]

Copyright reserved

QUESTION 4: SOLDERING AND WELDING

Explain the following processes:

4.1 Arc welding

4.2 Soft soldering

(2 × 4) **[8]**

QUESTION 5: COLD-WATER SUPPLY

5.1 Name each of the copper capillary fittings shown below by writing only the answer next to the question number in the ANSWER BOOK.

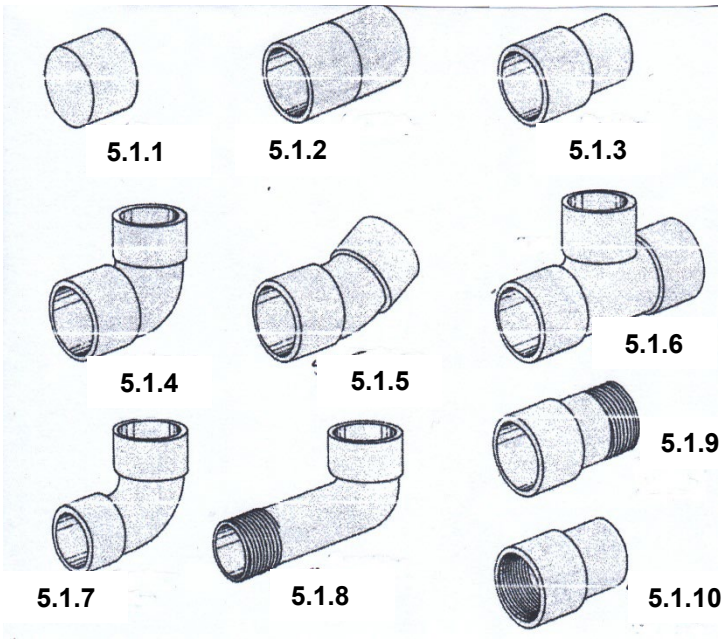

(10)

5.2 Name FOUR types of plastic pipes. (4)

5.3 Name FOUR properties that water must comply with to be suitable for human consumption (drinking water). (4)

[18]

QUESTION 6: HOT-WATER SUPPLY

6.1 Give the pressure ratings for geyser pressure relief valves with the following colour codes:

6.1.1 Yellow

6.1.2 Red

6.1.3 Blue

6.1.4 Orange

6.1.5 Black

(5 × 1) (5)

Copyright reserved

6.2 Differentiate between the following types of energy:

6.2.1 Radiant energy

6.2.2 Solar energy

(2 × 2) (4)

6.3 State THREE advantages of a Latco pressure reducing valve. (3)

[12]

QUESTION 7: DRAINAGE

7.1 Make a sketch of a vertical section through a double-trap siphon water-closet pan. (6)

7.2 Name FOUR sanitary fixtures and their abbreviations. (4 × 2) (8)

7.3 Describe the difference between a *one-pipe system* and a *two-pipe system* with regard to drainage. (4)

7.4 Why does a water closet not need to be fitted with a water-seal trap? (2)

[20]

QUESTION 8: SHEET METALWORK

The drawing below shows a truncated right cone.

Use the radial-line method to develop the pattern of the cone. Do not include the calculations for the overlap and joints. Scale 1:5.

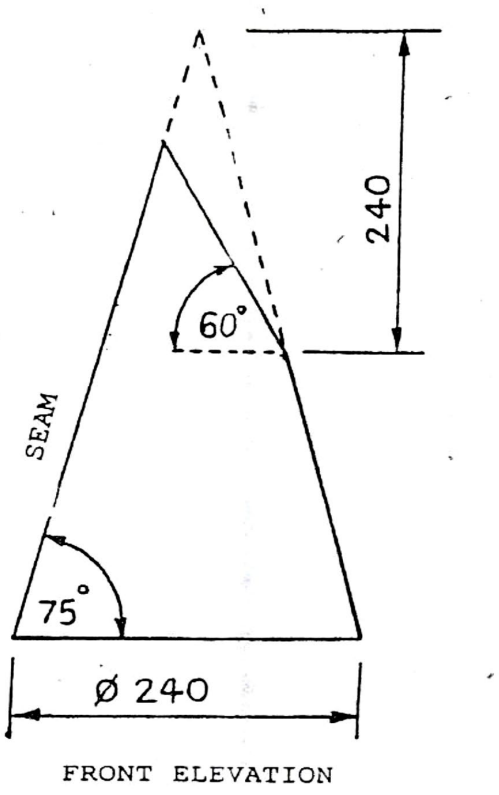

[12]

QUESTION 9: CALCULATIONS

A cylindrical tank with a diameter of 2 m has a height of 2,6 m.

Calculate:

9.1 The volume of the tank (3)

9.2 The contents of the tank in litres (2)

9.3 The mass of the water when the tank is filled (2)
[7]

TOTAL: 100

Copyright reserved